AD-A088 923 KENTUCKY UNIV LEXINGTON DEPT OF ELECTRICAL ENGINEERING F/G 9/3
SYNTHESIS METHODS APPLICABLE TO SEM POLE-PAIR ADMITTANCES.(U)
DEC 79 K A MICHALSKI, L W PEARSON
UNCLASSIFIED RR-79-5 NL

1 OF 2
AD A
088923

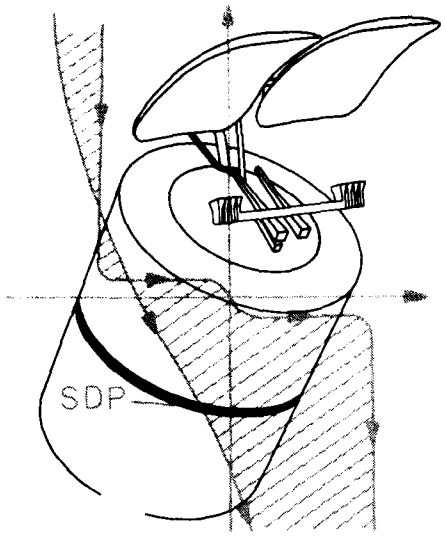

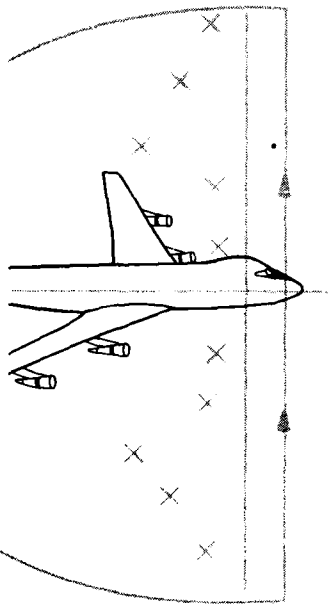

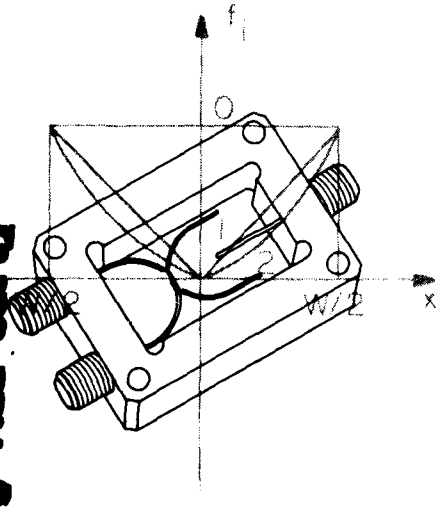

AD A088923

DDC FILE COPY

LEVEL II

ELECTROMAGNETICS RESEARCH REPORT

DTIC
ELECTE
SEP 8 1980
S C D

This document has been approved for public release and sale; its distribution is unlimited.

Department of Electrical Engineering
University of Kentucky
Lexington, Kentucky 40506

80 7 25 169

1

6

SYNTHESIS METHODS APPLICABLE TO SEM POLE-PAIR ADMITTANCES.

DTIC
ELECTE
SEP 8 1980
S D
C

10

Krzysztof A. Michalski
L. Wilson Pearson

9

University of Kentucky
Electromagnetics Research Report

14 RR —79-5

11 December 1979

12 121

This document has been approved for public release and sale; its distribution is unlimited.

This work was carried out in part through the support of a University of Kentucky Summer Graduate Fellowship and of a University of Kentucky Research Foundation Faculty Research Grant.

400922

ABSTRACT

SYNTHESIS METHODS APPLICABLE TO SEM

POLE-PAIR ADMITTANCES

The applicability of the first layer conjugate pole pair at a time equivalent circuit synthesis for energy collecting structures is considered. It is found that, at least for some highly resonant structures, the whole eigenset of poles can be approximately represented by the first layer dominant pole. The driving point admittance function can then be synthesized in the form of a parallel connection of simple pole-pair modules. The biquadratic functions corresponding to each conjugate pole pair are, in general, not positive real and thus physically realizable. It is found that after negligible resistive padding approximate realization is possible. The padded function is a minimum biquadratic - the real part of it is zero at some frequency ω_o. If $\omega_o = 0$ or $\omega_o = \infty$, the function can be easily realized by continued fraction expansion. If however ω_o is finite, it is shown, that the only transformerless configuration derivable is the Bott-Duffin network. The explicit form of this network, as well as Brune and Dralington network, is derived. It is demonstrated that the Darlington network reduces to Brune network or, if surplus factors are used, to Bott-Duffin network. The Miyata procedure is not applicable to minimum biquadratics.

After further approximation the Bott-Duffin network can be reduced to simple four element structure which has been shown to give favorable results for the thin wire dipole and loop antennas.

It is demonstrated that the equivalent networks derived are very sensitive to changes in element values. This and the influence of the parasitic effects associated with real circuit elements can unfavorably affect the practicability of the derived networks, should they be constructed.

TABLE OF CONTENTS

Section		Page
I.	INTRODUCTION	1
II.	POSITIVE REAL FUNCTIONS AND BASIC CONCEPTS	10
III.	SYNTHESIS OF BIQUADRATIC FUNCTIONS - PRELIMINARY	13
IV.	SYNTHESIS OF MINIMUM BIQUADRATIC FUNCTIONS - GENERAL METHODS	37
	Brune Method	38
	Bott-Duffin Method	40
	Darlington Method	67
	Miyata Procedure	84
V.	PRACTICAL MATTERS	89
	Capacitive Adjustment	89
	Parasitic Effects	89
	Network Sensitivity	92
VI.	CONCLUSIONS	97
VII.	APPENDIX	99
REFERENCES		111

Accession For
NTIS GRA&I ☑
DDC TAB ☐
Unannounced ☐
Justification
By
Distribution/
Availability Codes
Dist | Avail and/or special
A

PRECEDING PAGE BLANK-NOT FILMED

LIST OF FIGURES

Figure		Page
1.	Natural frequencies of the straight wire with L/d = 100. (Only Type I and Type II poles [45] are shown.)	3
2.	Natural frequencies of the circular loop, with $\Omega = 15$	5
3.	Real part characteristics of three classes of PR biquadratic functions	17
4.	(a) Real part characteristic of an unmodified pole-pair module for the dipole antenna, and (b) fragment of (a)	20
5.	Explicit ladder networks for the admittance function (11) (zero at infinity)	21
6.	Explicit ladder networks for the impedance function (11) (zero at infinity)	22
7.	Explicit ladder networks for the admittance function (13) (zero at zero)	23
8.	Explicit ladder networks for the impedance function (13) (zero at zero)	24
9.	Ladder networks for the case B = 0	26
10.	Five-element bridge networks	29
11.	Approximate equivalent network for dipole antenna	31
12.	Gaussian pulse used in transient analyses	32
13.	Transient response of the lumped circuit (Figure 11) and the result of the TWTD program analysis	33
14.	Equivalent network for the dipole antenna resulting from the approximateion (41)	35
15.	Transient response of the lumped circuit (Figure 14) and the result of the TWTD program analysis	36
16.	Brune network for biquadratic	41
17.	Brune network for biquadratic - final form	41
18.	Brune equivalent network for dipole antenna	42
19.	Transient response of the lumped circuit (Figure 18) and the result of TWTD program analysis	43

Figure | Page

20. Illustration of the Bott-Duffin method: network corresponding to eq. (60) 45

21. Bott-Duffin network for the Case A 48

22. Bott-Duffin network for the Case B 52

23. Illustration of the T-delta transformation 54

24. T-delta transformation used to simplify the Bott-Duffin networks. . 54

25. Modified Bott-Duffin networks for the Case A 56

26. Modified Bott-Duffin networks for the Case B 58

27. Real part characteristic of a modified pole-pair module typical for the dipole and loop antennas 60

28. Real part characteristic of a pole-pair module for a hypothetical structure 60

29. Simplified Bott-Duffin networks for the Cases A (a) and B (b) . . . 62

30. Simplified Bott-Duffin equivalent network for the dipole antenna 63

31. Transient response of the lumped circuit (Figure 30) and the result of TWTD program analysis 64

31A. Simplified Bott-Duffin equivalent network for the loop antenna . . 65

31B. Transient response of the lumped circuit (Figure 31A) and the result of the TWTD program analysis 66

32. Illustration of the Darlington procedure 68

33. Cauer realization: component two-port for a compact pole 68

34. Cauer realization for biquadratic 72

35. Perfect transformer and its equivalent 73

36. Darlington network for biquadratic 74

37. Darlington procedure: realization of $Z_1(s)$ - Case A 78

38. Darlington procedure: realization of $Z_1(s)$ - Case B 80

39. Darlington procedure: network equivalent to network given in Figure 38 81

Figure | Page

40. Darlington procedure: realization of $Z_2(s)$ - Case A 82

41. Darlington procedure: network equivalent to network shown in Figure 40 83

42. Darlington procedure: realization of $Z_2(s)$ - Case B 85

43. Final form of Darlington networks for Cases A (a) and B (b) 86

44. Early time response of the equivalent network for the dipole antenna (Figure 30). (a) Without correction, and (b) with 70pF shunt capacitor 90

45. Equivalent network for a real inductor 93

46. The influence of the parasitic effects: C = 1pF 94

47. The influence of the parasitic effects: C = 2pF 95

LIST OF TABLES

Table		Page
1.	First layer poles and residues for center-fed cylindrical antenna with L/d=100	4
2.	First layer poles and residues of loop wire antenna with Ω=15	6
3.	Test values for the first layer poles given in Table 1	16
4.	Minimum real part frequencies and necessary padding for pole-pair modules of dipole antenna	25

Section I

INTRODUCTION

The need for finite, lumped equivalent networks valid over a significant bandwidth in the analysis and design of antennas and scatterers has been widely recognized for a long time. Such networks may be useful, for example, in experiments designed to test the terminal circuits intended to operate with an antenna, before the antenna is actually constructed [35]. Also, existing circuit analysis programs can be used to calculate the frequency and/or time response of the structure under consideration.

The Singularity Expansion Method (SEM) is a powerful and convenient means of constructing equivalent networks for antennas and scatterers [4,5, 29,30,39]. From the SEM data the input admittance[1] of a single-port structure can be expressed as

$$\tilde{Y}(s) = \sum_n \tilde{Y}_n(s) \tag{1}$$

where $\tilde{Y}_n$, the terminal eigenadmittances, are given by

$$\tilde{Y}_n(s) = \sum_i \frac{\tilde{a}_{ni}}{s - s_{ni}} + \tilde{Y}_n^{ent}(s) + \tilde{Y}_n^{bi}(s) \tag{2}$$

where n indexes over the eigenmode sets of poles, the index i distinguishes among the poles associated with the given eigenmode, and $\tilde{a}_{ni}$ are the residues associated with the poles s_{ni}. The $\tilde{Y}_n^{ent}$ and the $\tilde{Y}_n^{bi}$ are, respectively,

---

[1]Admittance function resulting from the short-circuit boundary value problem is used in this work. However, analogous results are valid for the impedance function derived from the open-circuit boundary value problem.

the possible entire function and branch integral function contributions. Often it is more convenient to rewrite (2) in the form

$$\tilde{Y}_n(s) = \sum_i \left(\frac{\tilde{a}_{ni}}{s - s_{ni}} + \frac{\tilde{a}_{ni}}{s_{ni}} \right) + \tilde{Y}_n^{'ent}(s) + \tilde{Y}_n^{'bi}(s) \tag{3}$$

where the entire function has been appropriately modified to compensate for the constant terms included in the summation. The terms under the summation signs in (2) and (3) are known, respectively, as pole admittances and modified pole admittances [5].

It should be pointed out that for numerically or experimentally derived SEM descriptions the entire function and the branch integral contributions are not explicitly identifiable. To date, it also appears that for practical circuit synthesis it is necessary that both of these terms be zero. Further, for many problems of interest, they seem not to occur. Therefore, the branch integral and entire function terms are dropped henceforth from consideration.

The SEM data (the poles and residues) for a given structure can be extracted in three ways: 1) from measurements; 2) from an integral equation formulation by method of moments technique; or for certain simple structures, 3) from an integral equation formulation - analytically. As a typical example, the location of poles for dipole and loop wire antennas is shown in Figures 1 and 2 [42,43,45,7]. The first layer poles (poles closest to the j-axis) with the associated residues are listed for both structures in Table 1[1] and Table 2.

---

[1]The first pole of the dipole has been slightly modified (within a 5% accuracy margin) by Streable and Pearson in order to make the modified pole-pair admittance physically realizable.

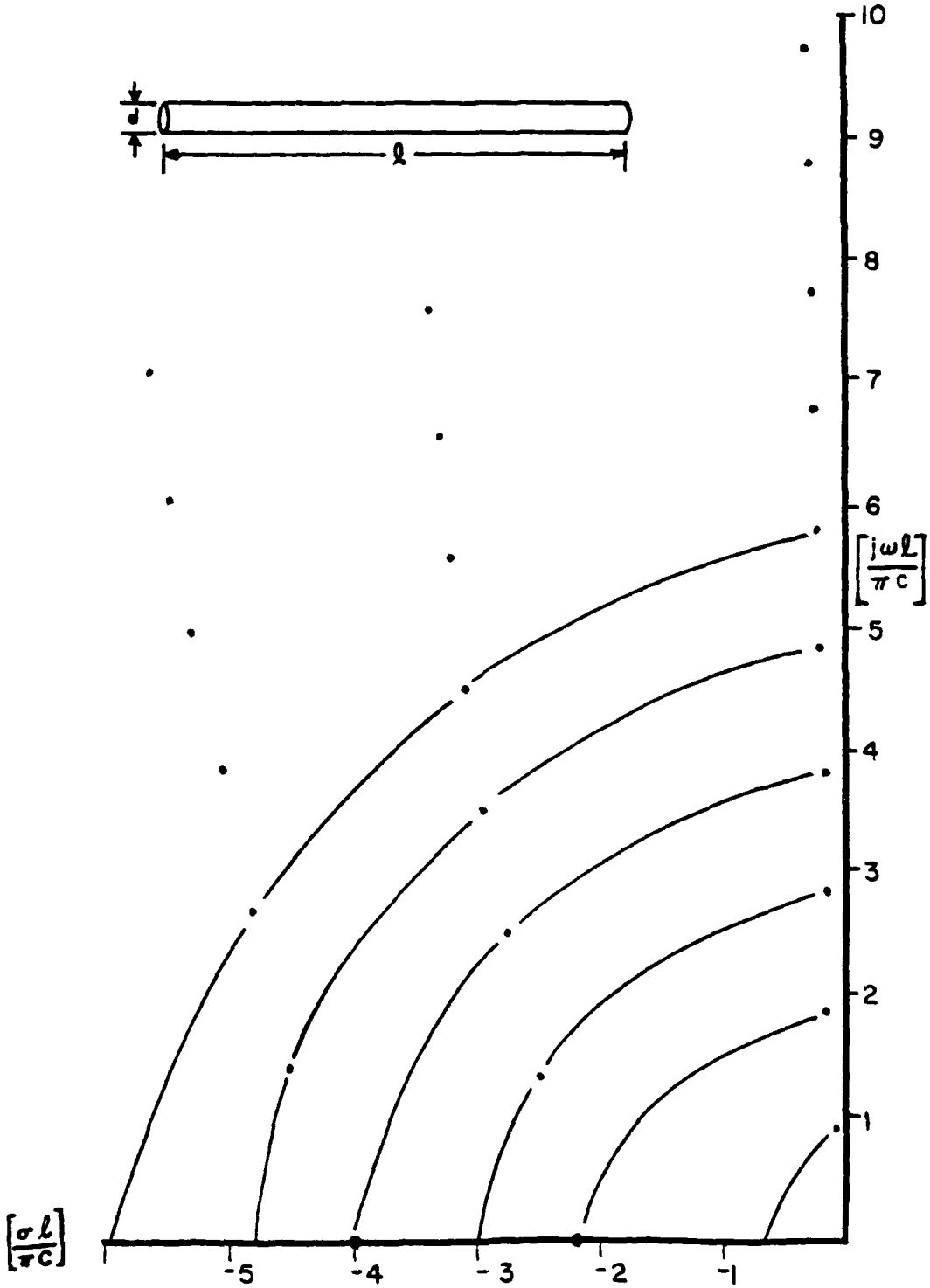

Figure 1. Natural frequencies of the straight wire with L/d = 100.

TABLE 1

First layer poles and residues for center-fed cylindrical antenna with L/d=100

L is the length of the dipole and d is the diameter of the wire. The even poles with zero residues are omitted.

No.	Poles[1]	Residues[1]
1.	$-.08427 + j\ 0.9158$[2]	$.1112 \times 10^{-2} + j\ .3121 \times 10^{-3}$
3.	$-.1473 + j\ 2.870$	$.1319 \times 10^{-2} + j\ .3301 \times 10^{-3}$
5.	$-.1877 + j\ 4.834$	$.1423 \times 10^{-2} + j\ .3521 \times 10^{-3}$
7.	$-.2177 + j\ 6.792$	$.1496 \times 10^{-2} + j\ .3699 \times 10^{-3}$
9.	$-.2426 + j\ 8.736$	$.1557 \times 10^{-2} + j\ .3839 \times 10^{-3}$

[1]Normalized to $c\pi/L$, c - speed of light.

[2]Slightly modified by Streable and Pearson.

The admittance (1) can be realized only approximately by a finite lumped network because the number of modes is infinite and must be truncated. Also, the number of poles associated with each eigenmode is infinite for some structures and only a finite number of them can be used. The truncated admittance function may be no longer positive real (PR)[1] and thus realizable.

In such case still useful approximate realization can often be obtained by finding pole groupings which give PR (or nearly PR) admittance function and/or by resistive padding. Both approaches were first investigated, successfully, by Streable and Pearson [39].

---

[1]See Section II for explicit definition of positive real functions.

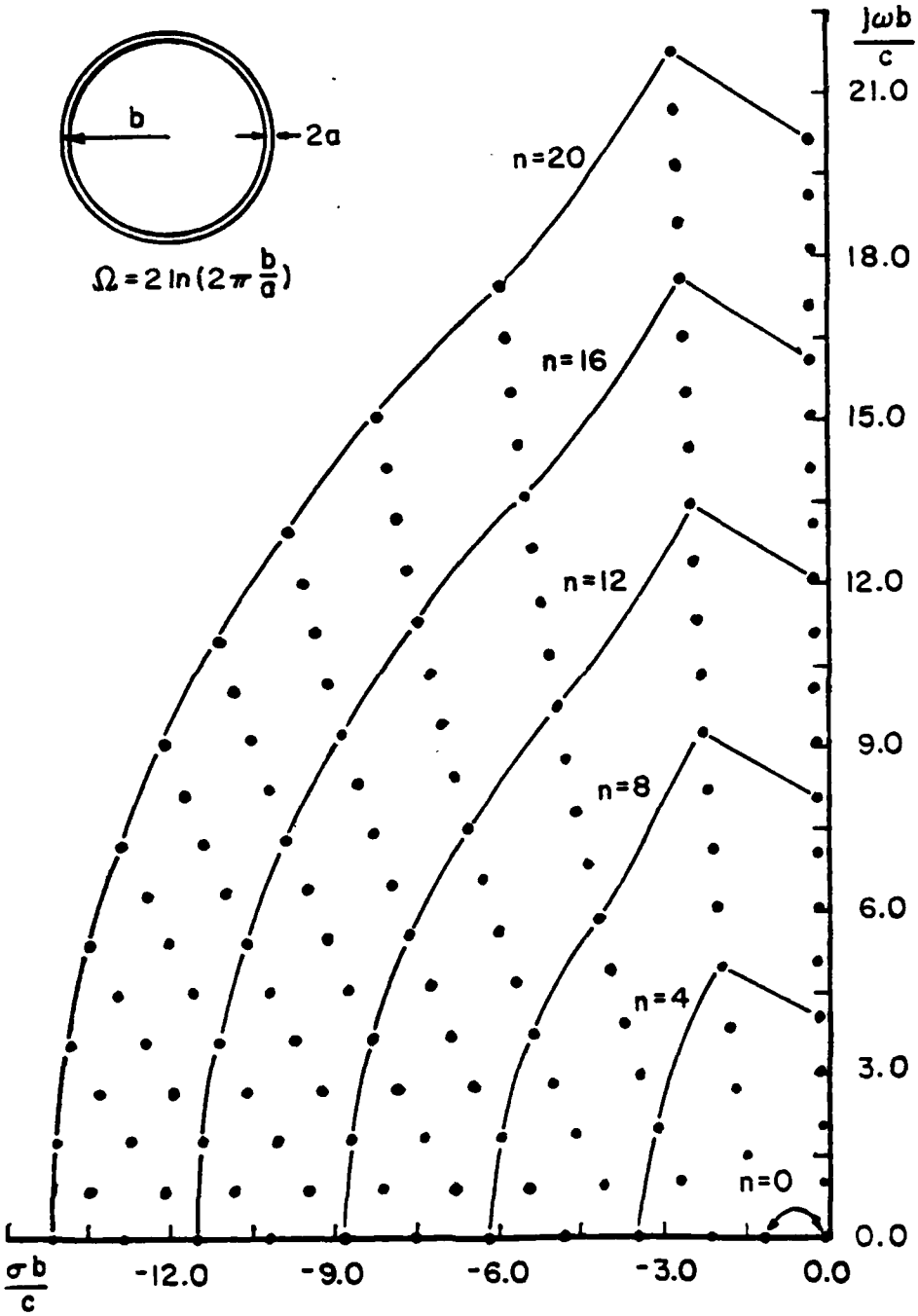

Figure 2. Natural frequencies of the circular loop, with $\Omega = 15$. (Only Type I and Type II poles [45] are shown.)

TABLE 2

First layer poles and residues of loop wire antenna with Ω=15.

$\Omega=2\ln(2\pi b/a)$, where a and b are the radius of the wire and the radius of the loop, respectively.

No.	Poles[1]	Residues[1]
1.	$-.7487 \times 10^{-1} + j\ 1.0388$	$.5301 + j\ .8934 \times 10^{-4}$
2.	$-.1083 + j\ 2.0526$	$.5726 + j\ .9395 \times 10^{-4}$
3.	$-.1340 + j\ 3.0625$	$.6033 + j\ .9873 \times 10^{-4}$
4.	$-.1558 + j\ 4.0706$	$.6279 + j\ .1033 \times 10^{-3}$
5.	$-.1751 + j\ 5.0777$	$.6489 + j\ .1076 \times 10^{-3}$
6.	$-.1927 + j\ 6.0840$	$.6672 + j\ .1117 \times 10^{-3}$
7.	$-.2091 + j\ 7.0897$	$.6837 + j\ .1157 \times 10^{-3}$
8.	$-.2245 + j\ 8.0950$	$.6988 + j\ .1195 \times 10^{-3}$
9.	$-.2391 + j\ 9.0999$	$.7126 + j\ .1231 \times 10^{-3}$
10.	$-.2529 + j10.1046$	$.7255 + j\ .1267 \times 10^{-3}$

[1]Normalized to c/b. There is also a pole at the origin with the real residue $a_{00}=4.6199 \times 10^{-4}$. This pole can be easily realized as a single shunt inductance $L=1/a_{00}$ and is dropped from consideration here.

One pole grouping possible, which leads to PR function (although recent investigations indicate that the branch integral contribution must be retained in the terminal eigenadmittance for some structures) is the grouping according to eigenmodes [29]. This, however, has the disadvantage, that the number of poles increases dramatically for higher modes (see Figures 1 and 2) resulting in impractically complex network. Also, the third- and higher-layer poles are usually hard to extract, and for many

even simple structures have not, so far, been extracted.

Even if the original function (1) is PR, a decomposition of it into simpler, realizable terms is desirable. Such decomposition can simplify the synthesis procedure significantly and also can lead to simpler network with more desirable topology.

One particularly attractive way of decomposition is breaking the original admittance function (1) into conjugate-pole-pair modules, as first suggested by Baum [5] and investigated further by Streable and Pearson [39].

Because the first layer poles are so close to the j-axis (see Figures 1 and 2), they give the main contribution to the input admittance of the structure. The question immediately arises if their contribution alone could reasonably good approximate the whole admittance over the frequency range of interest. That this is the case (at least for some high-Q structures) has also been demonstrated by Streable and Pearson [39]. In this procedure the whole eigenmode pole group is represented by a single, first-layer pole.

The first-layer pole grouping is particularly useful in cases when the SEM data is determined from measurements, when the higher-order layers of poles are extremely difficult to find [34].

The main concern of this study is the synthesis of the admittance function (1) on the conjugate-pole-pair basis. Thus, the realization of (1) in the form

$$\tilde{Y}(s) \cong \sum_{i}^{N} \tilde{Y}_i(s) \tag{4}$$

where

$$\tilde{Y}_i(s) = \frac{\tilde{a}_i}{s - s_i} + \frac{\tilde{a}_i^*}{s - s_i^*} + G_i \tag{5}$$

is investigated. In (5) the asterisk denotes the complex conjugate, and G_i is the padding necessary to render $\tilde{Y}_i$ PR. The index i distinguishes among the conjugate pole pairs.

After putting the terms over common denominator, the admittance (5) takes the form of a general biquadratic function

$$f(s) = \frac{As^2 + Bs + C}{Ds^2 + Es + F} . \tag{6}$$

This function received a great deal of attention in the literature, because explicit networks can be derived for it. The results scattered in the literature [13,14,28,33,20,3,17,41,48,19,36,46,18] are used heavily in this report. The emphasis of this work, however, is on the approximate synthesis stemming from initially non-PR biquadratics derived from SEM data. This has important consequences on what synthesis procedures are applicable.

If not otherwise stated it will be assumed that f(s) represents an admittance function Y(s).

The plan of the work is as follows. In Section II are summarized the basic concepts concerning the PR functions, to which references will be made in later parts of this study. In Section III the PR-ness conditions for biquadratic functions are derived, the necessary padding (if the function is non-PR) is computed, and synthesis methods for some special cases are considered.

In Section IV a study on the applicability of the various general synthesis procedures to a minimum biquadratic function is undertaken. Explicit Brune, Bott-Duffin and Darlington networks are derived. In Section V some important problems connected with the practical realization of the networks, such as the influence of parasitic elements, are briefly

considered. A computer program for the synthesis of conjugate-pole-pair modules, implementing the results of previous sections, is included in the Appendix.

Throughout this study some concepts are illustrated with the particular examples of the straight wire and loop wire structures with the parameters given in the Figures 1 and 2, and in Tables 1 and 2. The particular values L=100m and b=100m are used in synthesis in order to fix explicit values for circuit elements.

Section II

POSITIVE REAL FUNCTIONS AND BASIC CONCEPTS

A positive real (PR) function f(s) is defined as a function of complex variable $s = \sigma + j\omega$ satisfying the two requirements

$$\text{Re } f(s) \geq 0 \quad \text{for } \sigma \geq 0,$$

and (7)

$$f(s) \text{ real when } s \text{ is real.}$$

The positive real concept was introduced by Brune [10], who proved that every driving-point function of a physical network is PR and that every rational function that is PR can be realized using lumped RLCM elements. It was later proved by Bott and Duffin that any rational PR function can be realized as a driving point immitance with RLC elements only [8].

Since it is extremely difficult to apply the conditions (7) directly, an equivalent set of requirements, which are easier to check, is usually used [15]. Thus, a rational function f(s) is PR if the following necessary and sufficient conditions are satisfied (listed and carried out in their order of difficulty in testing them):

A. It has no poles or zeros in the right half-plane

B. Any j-axis poles are simple and have positive real residues

C. $\text{Re } f(j\omega) \geq 0 \quad \text{for } 0 \leq \omega \leq \infty$.

In an attempt to realize a driving-point immittance f(s) it is usually worthwhile, before applying a general synthesis procedure, to check if there are any poles or zeros on the j-axis. Such poles and zeros can be easily removed from $\tilde{Y}(s)$ (susceptance reduction) and/or from $\tilde{Z}(s) = 1/\tilde{Y}(s)$

(reactance reduction) without destroying the Pr-ness of the original function. When all the j-axis poles are removed from an admittance function $\tilde{Y}(s)$, it is called a minimum-susceptance function [1]. In a similar manner we define a minimum-reactance function as an impedance $\tilde{Z}(s)$ that has no poles on the j-axis. When, after applying these steps, a minimum-susceptance-minimum-reactance function is obtained, still another simplification, the so called resistance reduction is often possible. Namely, if the condition C. above is satisfied with the inequality sign, a conductance G can be removed from $\tilde{Y}(s)$ (or resistance R from $\tilde{Z}(s)$) still leaving the remaining function PR. The real part of this remainder function is zero at some frequency ω_0, therefore it is called a minimum-real-part function. If the zero of the real part occurs at $\omega_o = 0$ or $\omega_0 = \infty$, it is also a zero of the whole function because the imaginary part of a minimum-reactive-minimum-susceptive function is already zero at these extreme frequencies.[1] This zero of $\tilde{Y}(s)$ ($\tilde{Z}(s)$) can be subsequently removed as a pole of $\tilde{Z}(s)$ ($\tilde{Y}(s)$) and the whole process of real- and imagninary-part reduction can be attempted again until the so-called minimum function (minimum-reactance, minimum-susceptance and minimum-real-part) is obtained. In some cases this Foster preamble technique can lead to a complete, successful realization [38]. In general,

---

[1]Consider $\tilde{Y}(s)$, for example. Im $\tilde{Y}(j\omega)$ is an odd rational function of ω and can take one of the forms

$$\mathrm{Im}\,\{\tilde{Y}(j\omega)\} = \omega\,\frac{N(\omega^2)}{D(\omega^2)} \quad \text{or} \quad \mathrm{Im}\{Y(j\omega)\} = \frac{N(\omega^2)}{D(\omega^2)}\,.$$

Assume that $\tilde{Y}(s)$ is purely imaginary at $\omega = 0$. Then if the first form above holds, $\tilde{Z}(s)$ will have a removable pole at $s = 0$. If the second form holds, then $\tilde{Y}(s)$ has a pole at $s = 0$ which can be removed. Similar arguments hold for the case when the zero of the real part occurs at infinity.

however, we end up with a minimum function with zero real part at some finite frequency ω_0, and one of the general synthesis procedures must be employed. The procedures in question are those of Brune [10], Darlington [12], Bott and Duffin [8], and Miyata [26].

Section III

SYNTHESIS OF BIQUADRATIC FUNCTIONS - PRELIMINARY

In this and the following sections we will be mainly concerned with the synthesis of the biquadratic function (6) which can represent both $\tilde{Z}(s)$ or $\tilde{Y}(s)$, as the case might be.

The PR-ness condition for the immitance function (6) can be easily derived [23,1,21]. If the coefficients of (6) are positive, the conditions A. and B. of Section II are automatically satisfied. Thus, to guarantee that f(s) be PR, we require that

$$\mathrm{Re}\{f(j\omega)\} = \left.\frac{m_1 m_2 - n_1 n_2}{m_2^2 - n_2^2}\right|_{s = j\omega} = \frac{AD\omega^4 + (BE-AF-CD)\omega^2 + CF}{(F - D\omega^2)^2 + E^2\omega^2} \tag{8}$$

be nonnegative for $0 \leq \omega \leq \infty$ (condition C.), where m_1, n_1 denote, respectively, the even and odd parts of the numerator, and m_2, n_2 denote the even and odd parts of the denominator of (6). This leads to the following necessary and sufficient condition for f(s) to be PR:

$$(\sqrt{AF} - \sqrt{CD})^2 \leq BE. \tag{9}$$

If (9) is fulfilled with the equality sign, f(s) is a minimum function.

For the important special case where $f(s) \to 0$ at infinity, i.e. $A = 0$, we have

$$f(s) = \frac{Bs + C}{Ds^2 + Es + F} \tag{10}$$

and the PR-ness condition (9) now reads

$$BE - CD \geq 0. \tag{11}$$

When $f(o) = 0$, i.e. $C = 0$, we obtain

$$f(s) = \frac{As^2 + Bs}{Ds^2 + Es + F} \tag{12}$$

with the condition

$$BE - AF \geq 0. \tag{13}$$

The above conditions can be easily expressed in terms of the poles and residues. Thus, for the conjugate pole-pair admittance

$$\tilde{Y}_n(s) = \frac{\tilde{a}_n}{s - s_n} + \frac{\tilde{a}_n^*}{s - s_n^*} \tag{14}$$

with $\tilde{a}_n = \alpha_n + j\beta_n$ and $s_n = -\sigma_n + j\omega_n$ we get the special case (10) where

$$B = 2\alpha_n \qquad C = 2(\alpha_n\sigma_n - \beta_n\omega_n)$$

$$D = 1 \qquad E = 2\sigma_n \qquad F = |s_n|^2$$

The PR-ness condition (11) and the requirement that the above coefficients be positive give the following restriction on the residues

$$\frac{\alpha_n}{|\beta_n|} \geq \frac{\omega_n}{\sigma_n}. \tag{15}$$

This condition can be given a simple geometrical interpretation, as discussed by Guillemin [15].

The other special case (12) results from the modified conjugate-pole-pair module

$$\tilde{Y}_n(s) = \frac{\tilde{a}_n}{s - s_n} + \frac{\tilde{a}_n}{s_n} + \frac{\tilde{a}_n^*}{s - s_n^*} + \frac{\tilde{a}_n^*}{s_n^*}. \tag{16}$$

This function approaches zero for $s \to 0$ and is particularly well suited for the modelling of the input admittance of simply connected objects.

After combination of terms in (16) we get

$$A = 2(\beta_n\omega_n - \alpha_n\sigma_n) \qquad B = 2\alpha_n(\omega_n^2 - \sigma_n^2) + 4\beta_n\sigma_n\omega_n$$

$$D = |s_n|^2 \qquad E = 2\alpha_n|s_n|^2 \qquad F = |s_n|^4 \quad .$$

The requirement that A and B be positive leads to the conditions

$$\beta_n\omega_n - \alpha_n\sigma_n \geq 0 \tag{17}$$

and

$$\alpha_n(\omega_n^2 - \sigma_n^2) + 2\beta_n\sigma_n\omega_n > 0. \tag{18}$$

The PR-ness condition (14) gives

$$-\alpha_n\sigma_n(\sigma_n^2 - 3\omega_n^2) + \beta_n\omega_n(3\sigma_n^2 - \omega_n^2) \geq 0. \tag{19}$$

It is interesting to point out that the PR-ness tests (15) and (17) are mutually-exclusive, which means that a conjugate-pole-pair module can be realized only in one of the two forms (modified or unmodified), but not in both.

As an example, the test values for the center-fed cylindrical antenna are given in Table 3. As can be seen from this table, all poles except the first one fail to meet criterion (19). The test (17) is met by all poles (thus (15) is violated), so the realization in the unmodified form (14) is in no case possible.

Although the results given in Table 3 are somewhat discouraging, it is evident that the PR-ness conditions are in most cases only slightly violated. This suggests that, after negligible padding - that is removing a small negative real part from the function and neglecting it - an approximate realization could be possible. The results of such an approach are

TABLE 3

Test values for the first layer poles given in Table 1.

Pole	Test value		
	(17)	(18)	(19)
1.	$.1921 \times 10^{-3}$	$.9729 \times 10^{-3}$	$.1485 \times 10^{-5}$
3.	$.7531 \times 10^{-3}$	$.1111 \times 10^{-1}$	$-.2945 \times 10^{-2}$
5.	$.1435 \times 10^{-2}$	$.3384 \times 10^{-1}$	$-.2088 \times 10^{-1}$
7.	$.2187 \times 10^{-2}$	$.7004 \times 10^{-1}$	$.7048 \times 10^{-1}$
9.	$.2976 \times 10^{-2}$	.1204	-.1689

discussed in a later part of this report.

It is evident from Section II that the nature of the frequency characteristic of the real part of an immittance function Re $f(j\omega)$ is extremely important in the synthesis procedure.

Following Matthaei [23], we can, in general, classify immittances of the form (6) in three classes: Class I having Re $f(j\omega)_{min}$ at $\omega = 0$; Class II having Re $f(j\omega)_{min}$ at $\omega = \infty$; and Class III having Re $f(j\omega)_{min}$ at finite values of $\pm\,\omega_o$ (see Figure 3 (a), (b), and (c), respectively).

As was pointed out in Section II, an important process in the synthesis of networks is the procedure of removing a real constant[1] from the immittance function, so that the resulting remainder function $f'(s)$ has the property that

$$\mathrm{Re}\{f'(j\omega)\}_{min} = 0. \tag{20}$$

[1] We allow the removal constant to be either positive or negative, thus implying the removal of a resistance or conductance in the positive case, or implying the neglecting of a small negative quantity - i.e. padding.

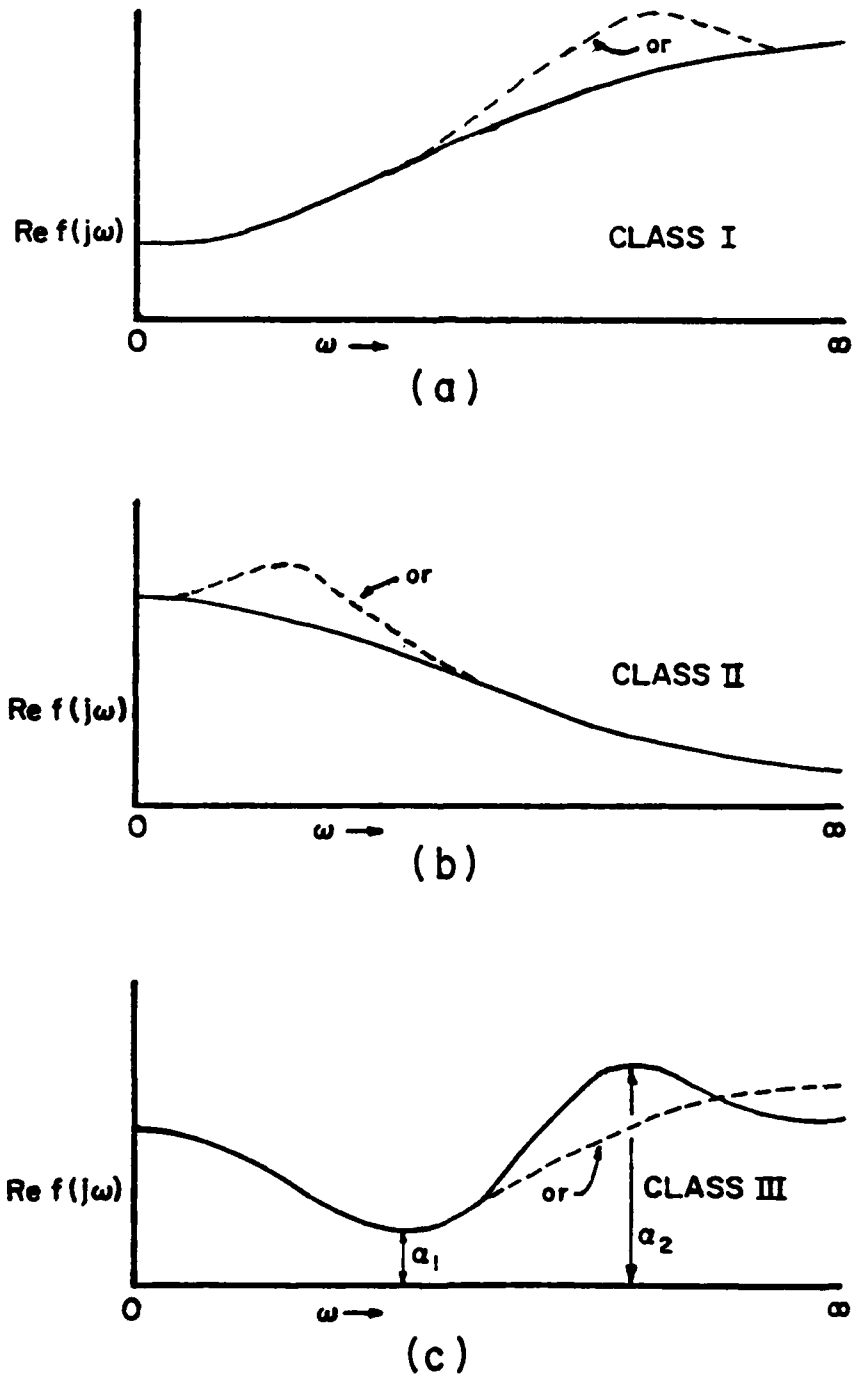

Figure 3. Real part characteristics of three classes of PR biquadratic functions.

Thus, we seek the frequency ω_o and the removal constant α for which

$$\left\{ \frac{m_1 m_2 - n_1 n_2}{m_2^2 - n_2^2} \bigg|_{s = j\omega} - \alpha \right\}_{min} = 0 \tag{21}$$

From (21) it can be seen that

$$m_1 m_2 - n_1 n_2 - \alpha m_2^2 + \alpha n_2^2 \Big|_{s = j\omega} = 0 \tag{22}$$

must have second-order roots at frequencies where (20) is satisfied. Expressing (22) in terms of the coefficients of (6), we obtain

$$D(A - \alpha D)\omega^4 - (W - \alpha U)\omega^2 + F(C - \alpha F) = 0 \tag{23}$$

where

$$W = AF + CD - BE \qquad U = 2DF - E^2.$$

The requirement that (23) has double order root in ω^2 [47] leads to the following equation for α

$$(U^2 - 4D^2F^2)\alpha^2 + (4ADF^2 + 4CD^2F - 2UW)\alpha + (W^2 - 4ACDF) = 0 \tag{24}$$

The smaller of the two roots of (24), for which

$$X = \frac{W - \alpha U}{2D(A - \alpha D)} \geq 0 \tag{25}$$

is the required solution.

Having α, the minimum-real-part frequency ω_o can be computed from

$$\omega_o = \sqrt{X} \ . \tag{26}$$

Before subtracting α from $F(s)$, we must compare it with $\alpha_o = f(0)$ and $\alpha_\infty = f(\infty)$. The smallest value among α, α_o, and α_∞ is the sought minimum value of Re $f(j\omega)$.

The constant removal affects only the numerator coefficients of (6),

the new values of which are given by

$$A = A' - GD$$
$$B = B' - GE \qquad (27)$$
$$C = C' - GF$$

where the old coefficients are primed.

If the α computed from (24) is negative, it gives the value of a shunt conductance (or series resistance - for impedance function) which must be added to the non-PR immittance f(s) in order to render it a minimum PR function. This procedure is called resistive padding [15].

As a typical example, the real part characteristic of the third unmodified pole pair module for the dipole antenna is given in Figure 4. As can be seen from Figure 4(a) the real part is negative for low frequencies. This is shown in detail in part (b) of this figure. The minimum real part frequencies and the resistive padding necessary to assure PR-ness of the unmodified and modified pole-pair modules for the cylindrical antenna are given in Table 4.

If any of the new coefficients A, B, or C in (27) happens to be zero, the resulting function can be easily synthesized. Thus, if $\alpha = A'/D$, $A = 0$, and f(s) has the form (10). This immittance has zero at infinity which can be readily removed as a single reactance. Similarly, if $\alpha = C'/F$, $C = 0$, and we obtain the function of the form (12), which has zero at $s = 0$ which can be removed as a pole of $1/f(s)$. In both cases the remaining function can be easily realized with three RL or RC elements. The final networks for the two cases with explicit expressions for the element values, both for $f(s) = Y(s)$ and $f(s) = Z(s)$, are given in Figures 5 and 6, and Figures 7 and 8, respectively.

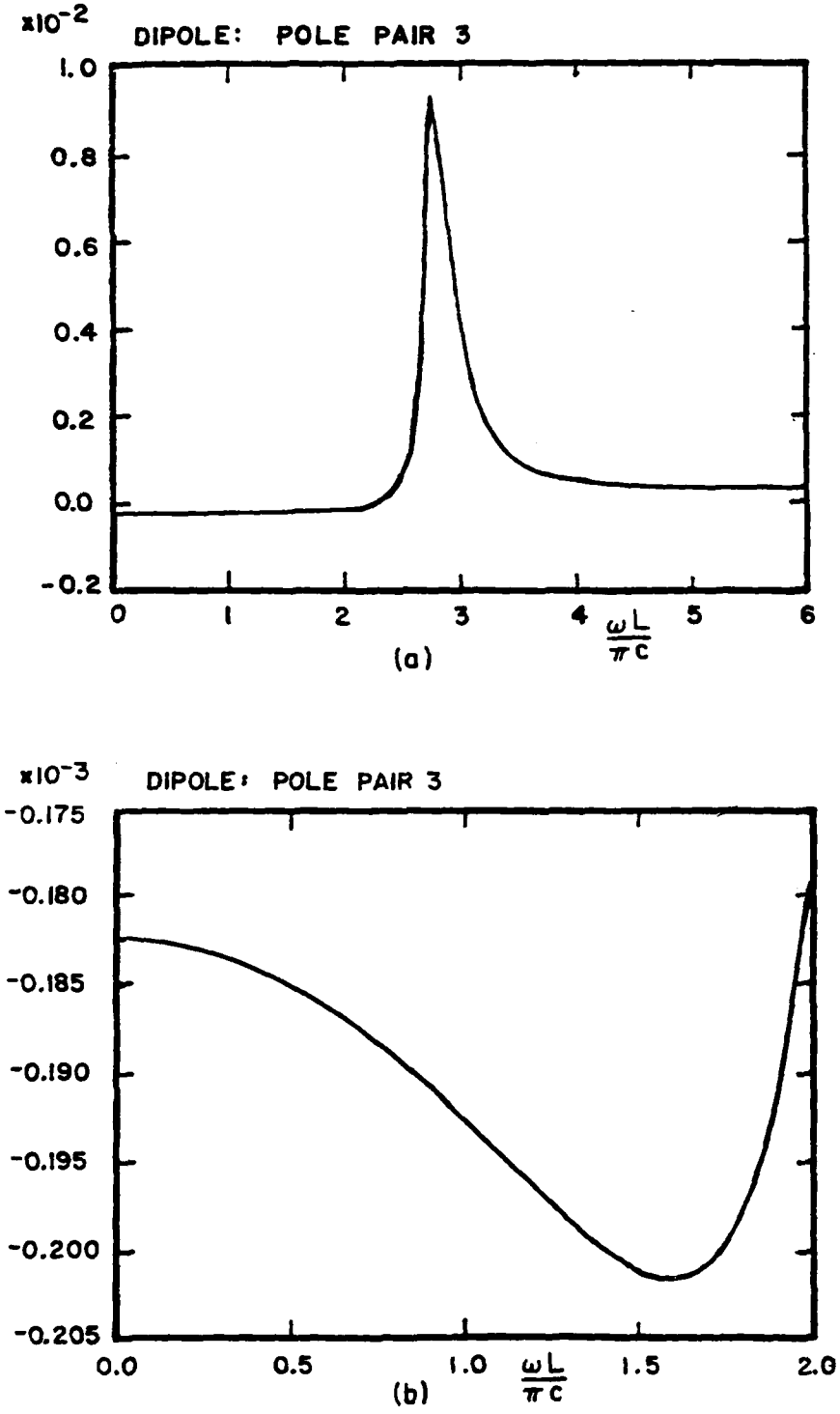

Figure 4. (a) Real part characteristic of an unmodified pole-pair module for the dipole antenna, and (b) fragment of (a).

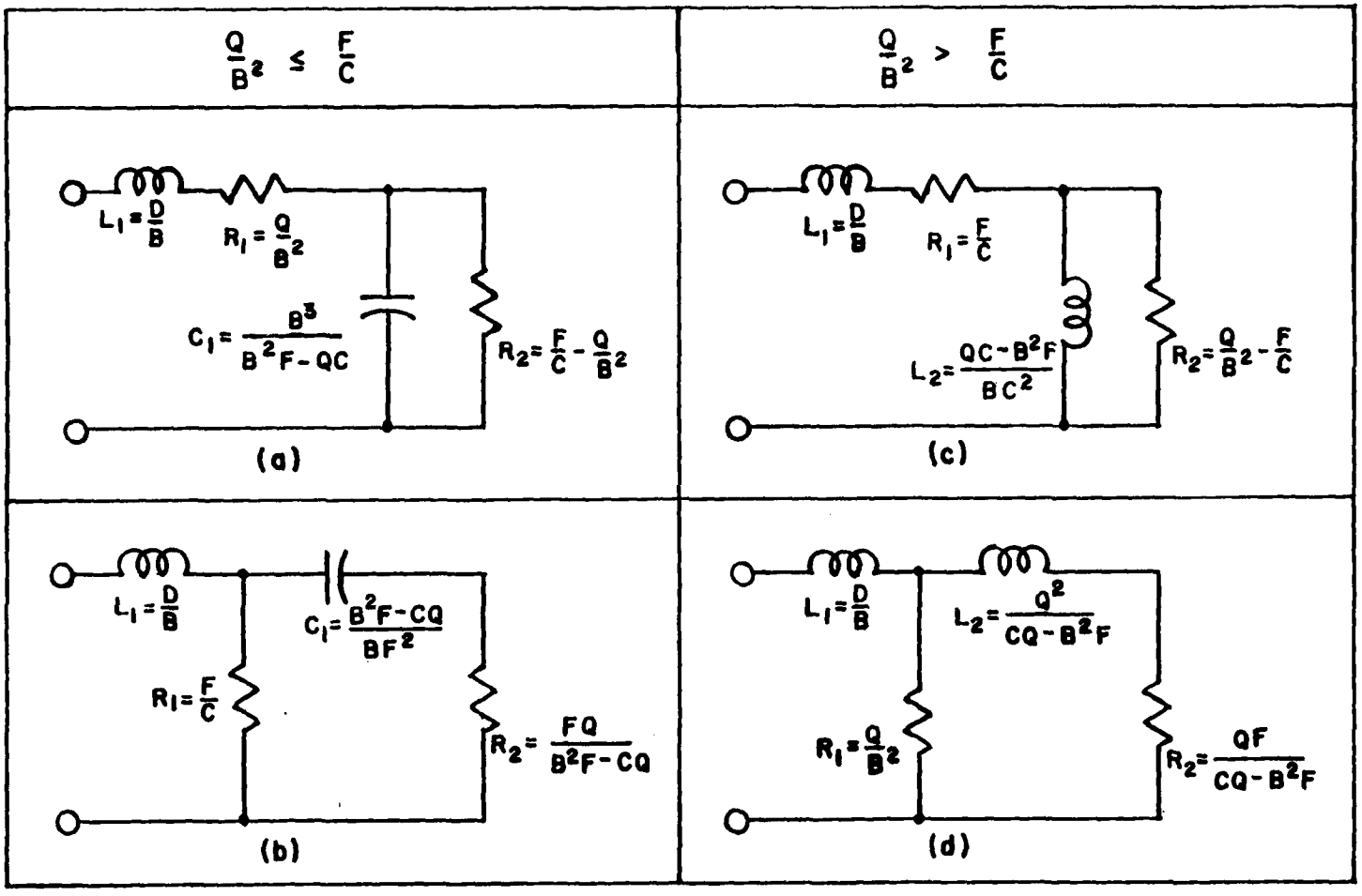

Figure 5. Explicit ladder networks for the admittance function (11) (zero at infinity).

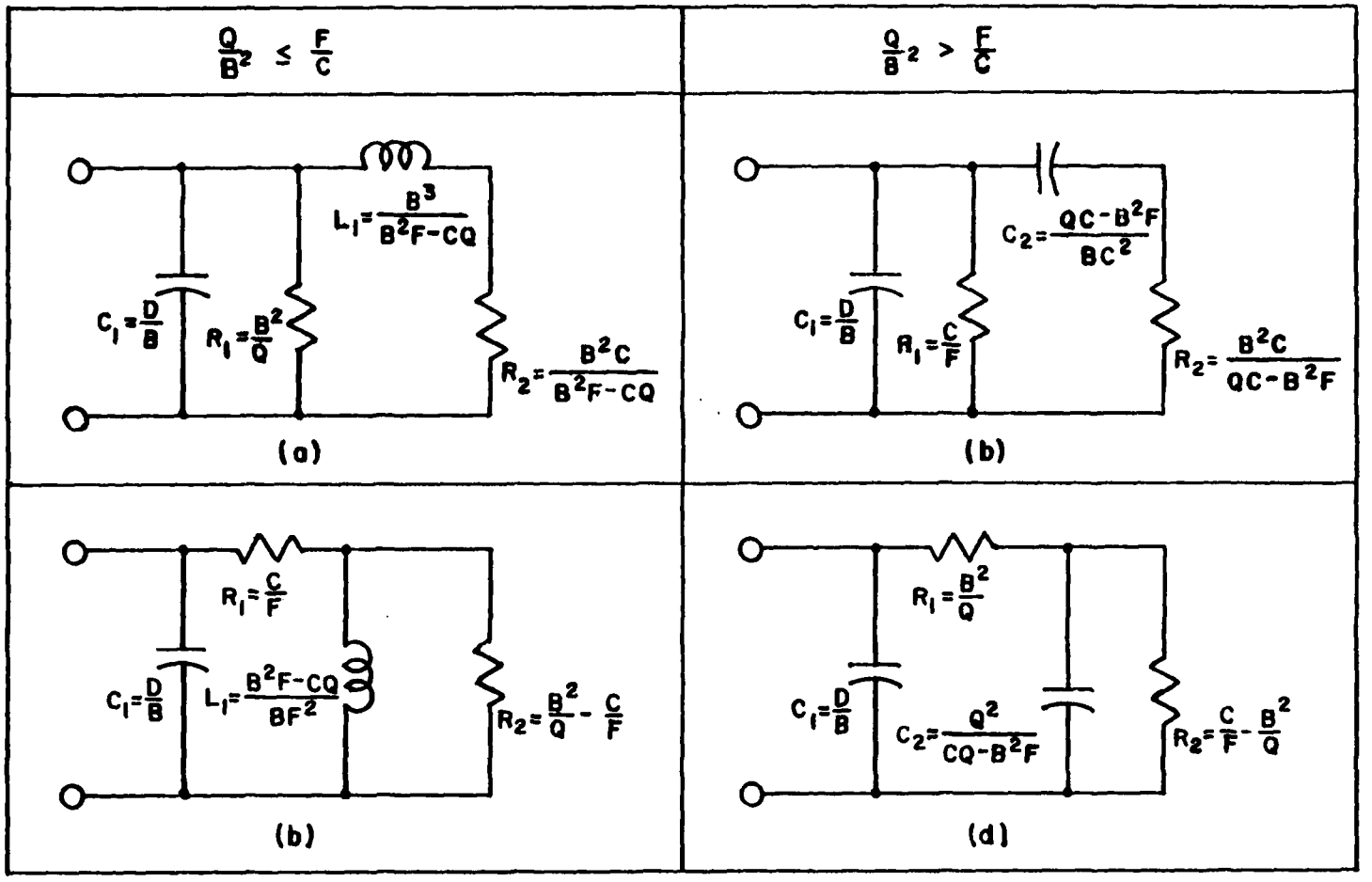

Figure 6. Explicit ladder networks for the impedance function (11) (zero at infinity).

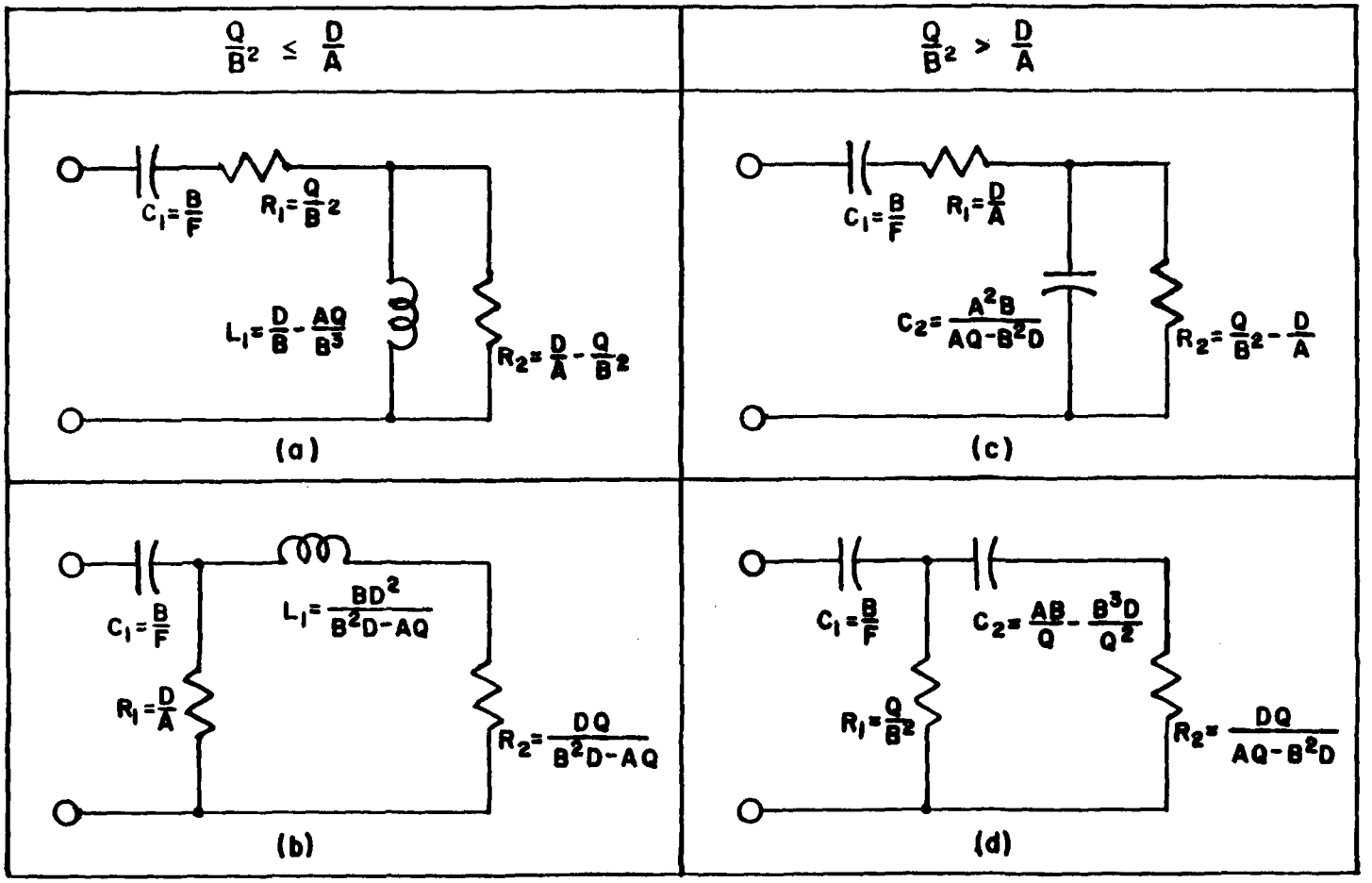

Figure 7. Explicit ladder networks for the admittance function (13) (zero at zero).

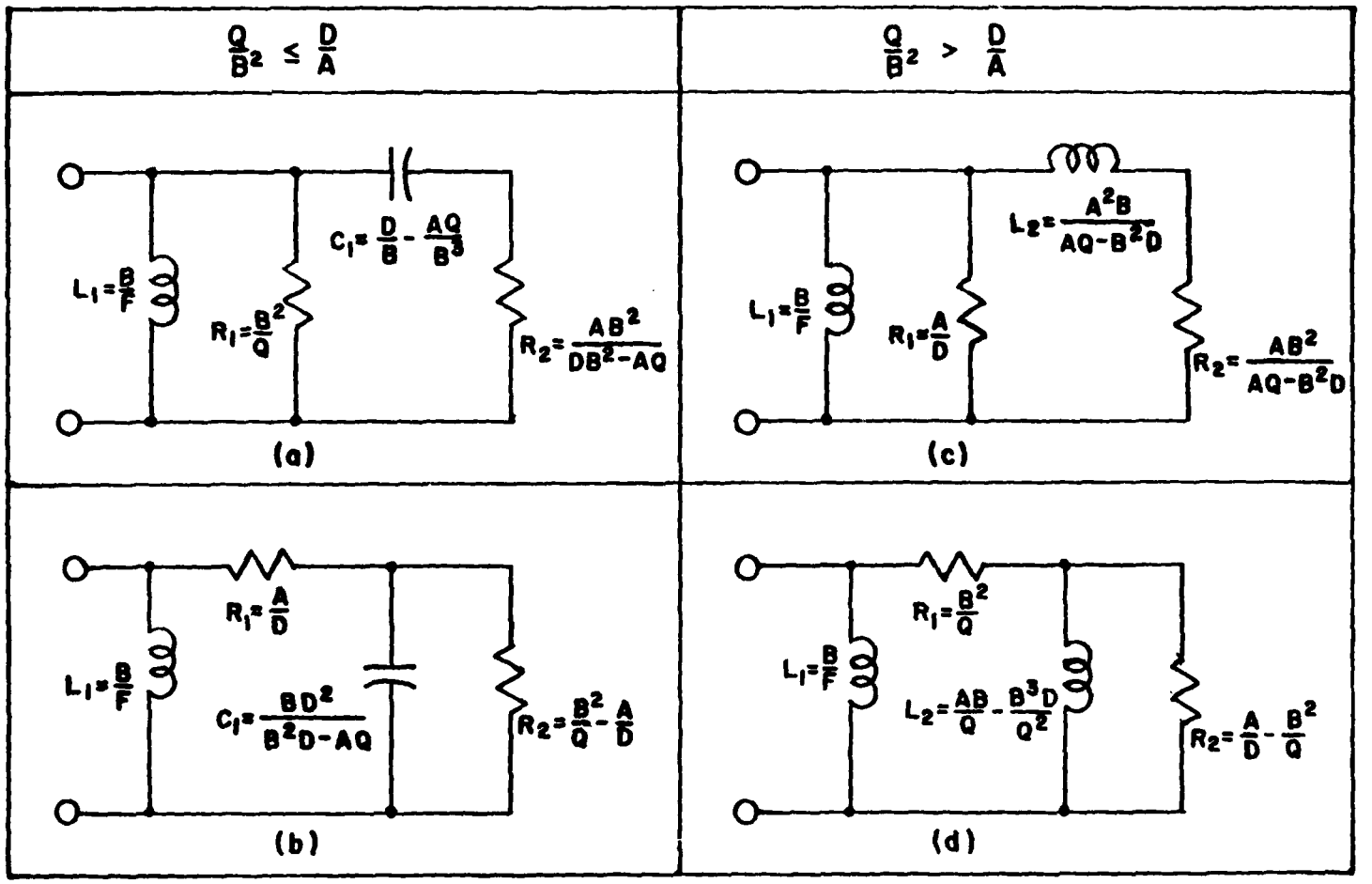

Figure 8. Explicit ladder networks for the impedance function (13) (zero at zero).

TABLE 4

Minimum real part frequencies and necessary padding for pole-pair modules of dipole antenna.

Pole-pair	Minimum real part frequency[1]	Necessary padding	
		Unmodified	Modified
1.	.0	2.201	-----
3.	1.598	4.959	51.85
5.	3.243	6.507	32.21
7.	4.967	7.546	26.44
9.	6.708	8.379	24.14

[1]Normalized.

The third case possible, $B = 0$, is realizable only if

$$AF - CD = 0 \tag{28}$$

(as a consequence of (19)). The resulting networks for the admittance and impedance functions are shown in Figure 9.

The situation is more difficult for the case when all the coefficients of (6) are greater than zero but still in some cases a simple realization is possible. Thus if f(s) or its reciprocal is a Class I or Class II PR function, it can be realized by a continued-fraction expansion - a process of repeated long division and inversion applied to the numerator and the denominator polynomials of the given function and its remainders in forward or reverse order [23,22].

It can be shown [23,20] that the biquadratic function (6) can be expanded in continued fraction only in two cases when either

$$\frac{C}{F} > \frac{A}{D} \tag{29}$$

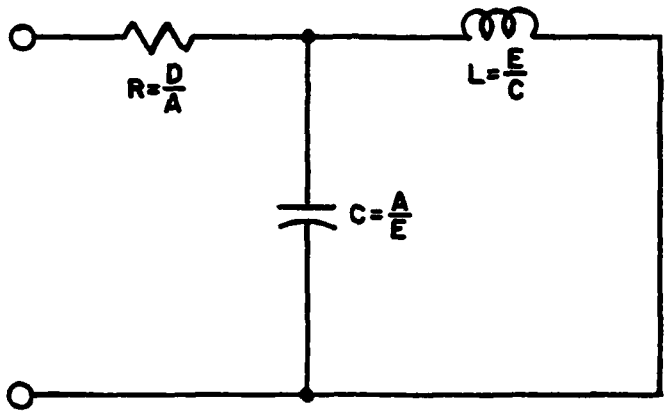

(a)

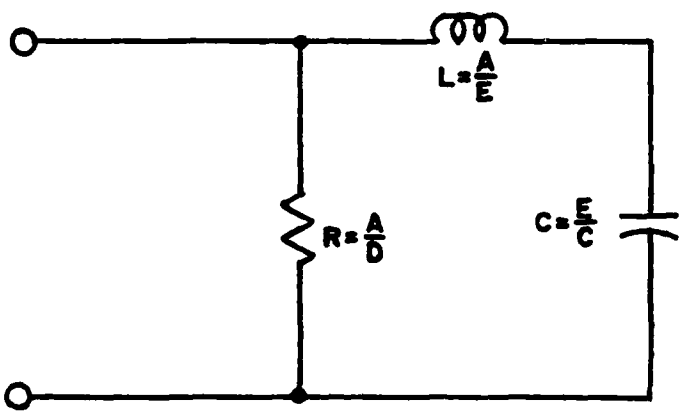

(b)

Figure 9. Ladder networks for the case B = 0.

and

$$BE \geq (CD - AF) + \frac{AE^2}{D} \tag{30}$$

or

$$\frac{A}{D} > \frac{C}{F} \tag{31}$$

and

$$BE \geq (AF - CD) + \frac{CE^2}{F}. \tag{32}$$

hold.

If the immittance (6) is a Class III function it cannot be realized in a simple ladder form and in general more sophisticated synthesis procedures are necessary, as described in Section IV. However, if the function in question is not a minimum function, it often can be decomposed into a sum of terms to which the simple synthesis procedures desscribed earlier are still applicable [23,20]. Thus, if

$$BE \geq |AF - CD| \tag{33}$$

the immittance (6) can be decomposed as follows.

If

$$\frac{A}{D} > \frac{C}{F} \tag{34}$$

we can write

$$f(s) = \frac{\frac{CD}{F} s^2 + C}{Ds^2 + Es + F} + \frac{A - \frac{CD}{F} s^2 + Bs}{Ds^2 + Es + F} \tag{35}$$

where for the first term (28) is satisfied and it can be realized in one of the forms shown in Figure 9. The second term is of the form (12) and can be synthesized as shown in Figures 7 and 8. The PR-ness condition (13) is guaranteed by (33).

If

$$\frac{C}{F} > \frac{A}{D} \tag{36}$$

(and (33) holds) the following decomposition is possible

$$f(s) = \frac{As^2 + \frac{AF}{D}}{Ds^2 + Es + F} + \frac{Bs + \frac{CD - AF}{D}}{Ds^2 + Es + F} \tag{37}$$

where again the first term is realizable as shown in Figure 9. The second term has the form (10) and is realizable as shown in Figures 5 and 6.

Another alternative for decomposing a Class III nonminimum PR function into sum of a Class I and Class II functions applies in some cases. It takes the form

$$f(s) = \frac{As^2 + Ts}{Ds^2 + Es + F} + \frac{(B - T)s + C}{Ds^2 + Es + F} . \tag{38}$$

From (11) and (13) the range of values of the coefficient T can be determined as

$$\frac{AF}{E} \leq T \leq \frac{BE - CD}{E} . \tag{39}$$

It follows from (39) that this decomposition is possible only if

$$BE \geq AF + CD \tag{40}$$

- a much stronger condition than (33).

It can be shown that if f(s) fails to satisfy (33) or (40), then 1/f(s) also fails to satisfy them.

A limited class of biquadratic minimum admittances can be realized in a form of five-element bridge networks, as discovered by Kim and VanValkenburg [19,46] (see Figure 10). The conditions which must be satisfied by the coefficients are

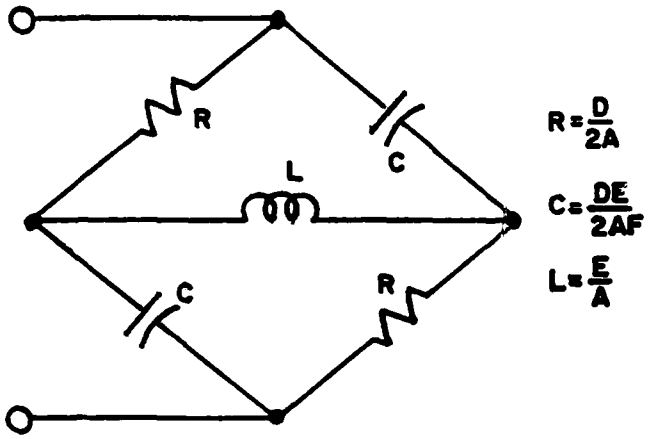

(a)

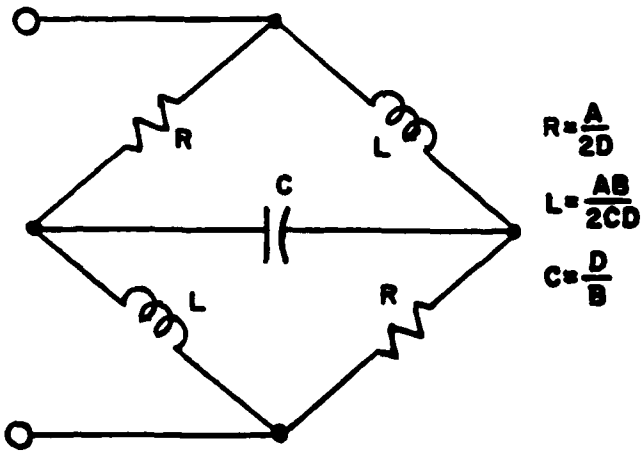

(b)

Figure 10. Five-element bridge networks.

$$AF = 4\ BE = 4\ CD$$

and

$$4\ AF = 4\ BE = CD$$

for the networks (a) and (b), respectively. This is, of course, a very restrictive condition. Thus these networks are not of particular interest in this development.

As was mentioned earlier, Streable and Pearson [39] have shown that the first pole of the dipole antenna (see Table 1) can be perturbed slightly (within a 5% margin) so that the modified pole-pair admittance associated with that pole is physically realizable. This admittance has the form (12) and circuit (a) from Figure 7 can be directly employed. Unfortunately, the other pole-pair modules of the dipole (and all modules, except the first, of the loop) fail to satisfy the PR-ness condition (13). Thus, a resistive padding is necessary. The padded admittances, however, has the general form (6) and the simple networks from Figures 5 and 7 cannot be used. It can also be shown that the decomposition techniques discussed above apply neither for the dipole nor the loop antenna. Thus, the general synthesis methods discussed in Section IV must be used.

It is evident from Table 3 that the PR-ness test is only slightly violated by the third and higher order modified pole-pair modules for the dipole antenna. (Similar situation holds for the loop antenna.) The question immediately arises if these pole-pair admittances could be realized approximately by still using the circuit (a) from Figure 7 and neglecting small negative elements which could arise. Such attempt has been made and the network shown in Figure 11 was obtained. The transient response of this network for the Gaussian pulse defined in Figure 12 was evaluated by SCEPTRE [9] circuit analysis program and compared with the

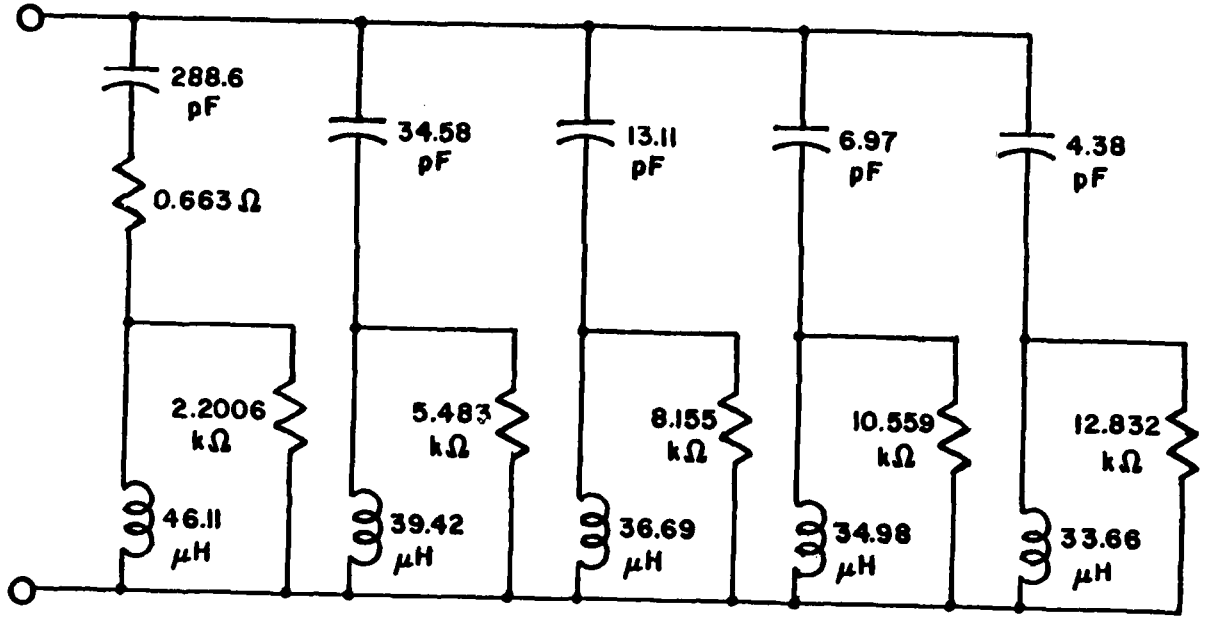

Figure 11. Approximate equivalent network for dipole antenna.

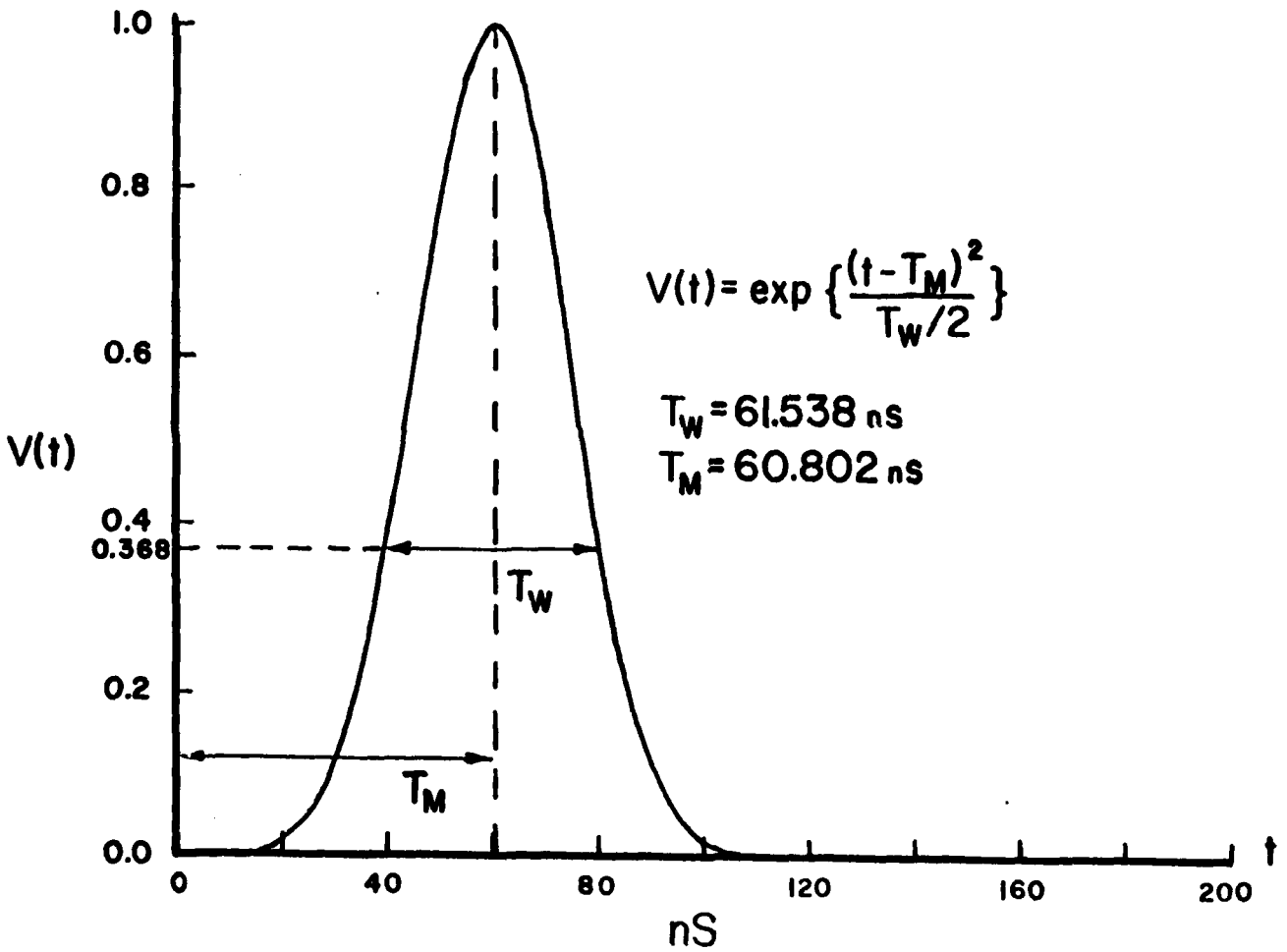

Figure 12. Gaussian pulse used in transient analyses.

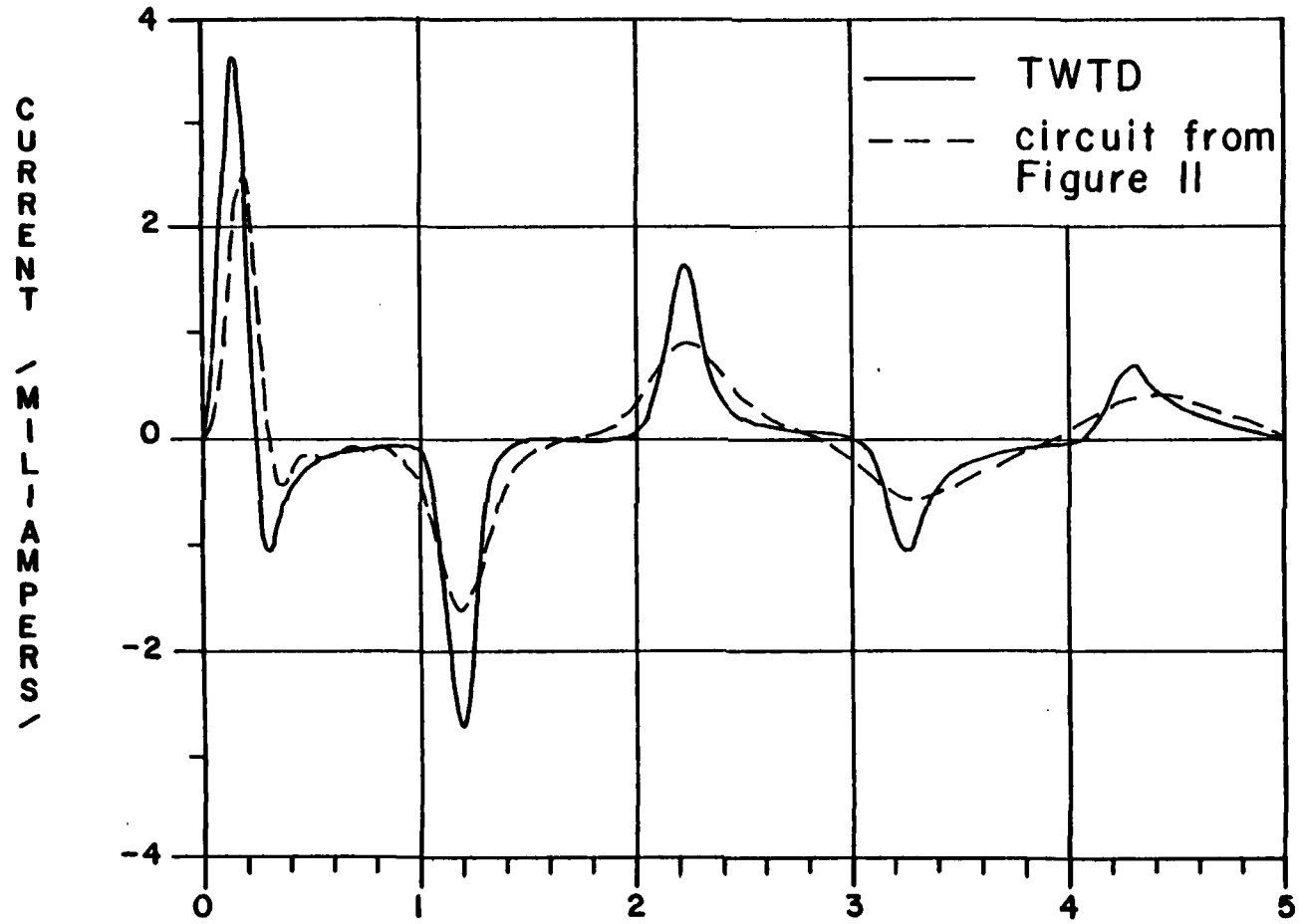

Figure 13. Transient response of the lumped circuit (Figure 11) and the result of the TWTD program analysis.

response obtained from the TWTD [25] thin wire analysis program. The results are shown in Figure 13. It is evident that, although the main features are preserved in the circuit response, the agreement between the two curves is not satisfactory.

Another approximate equivalent network for the dipole antenna results from the approach suggested by Baum and Singaraju [6]. They approximated the natural modes of the dipole by sinusoidal functions and derived analytically the following expression[1] for the residues (real and equal for all poles)

$$a = \frac{4}{\Omega Z_o} \tag{41}$$

where Ω is the thickness factor and Z_o is the intrinsic impedance of free space. For the dipole from Table 1 $a \cong .001$. For this residue and the poles listed in Table 1 the PR-ness condition (14) is always satisfied and the input admittance is realizable in the form (10). Using the circuit (a) from Figure 5 we obtain the network shown in Figure 14. One deficiency of this network is apparent: its admittance is finite at zero frequency, which is inconsistent with the structure under consideration.

The results of the SCEPTRE and the TWTD analyses are shown in Figure 15. The same Gaussian pulse as before was used.

Again, the agreement between these curves is not very good, but the last approach, as more systematic than the previous ad hoc procedure, is, of course, more satisfactory.

---

[1] Normalized to $\pi c/L$.

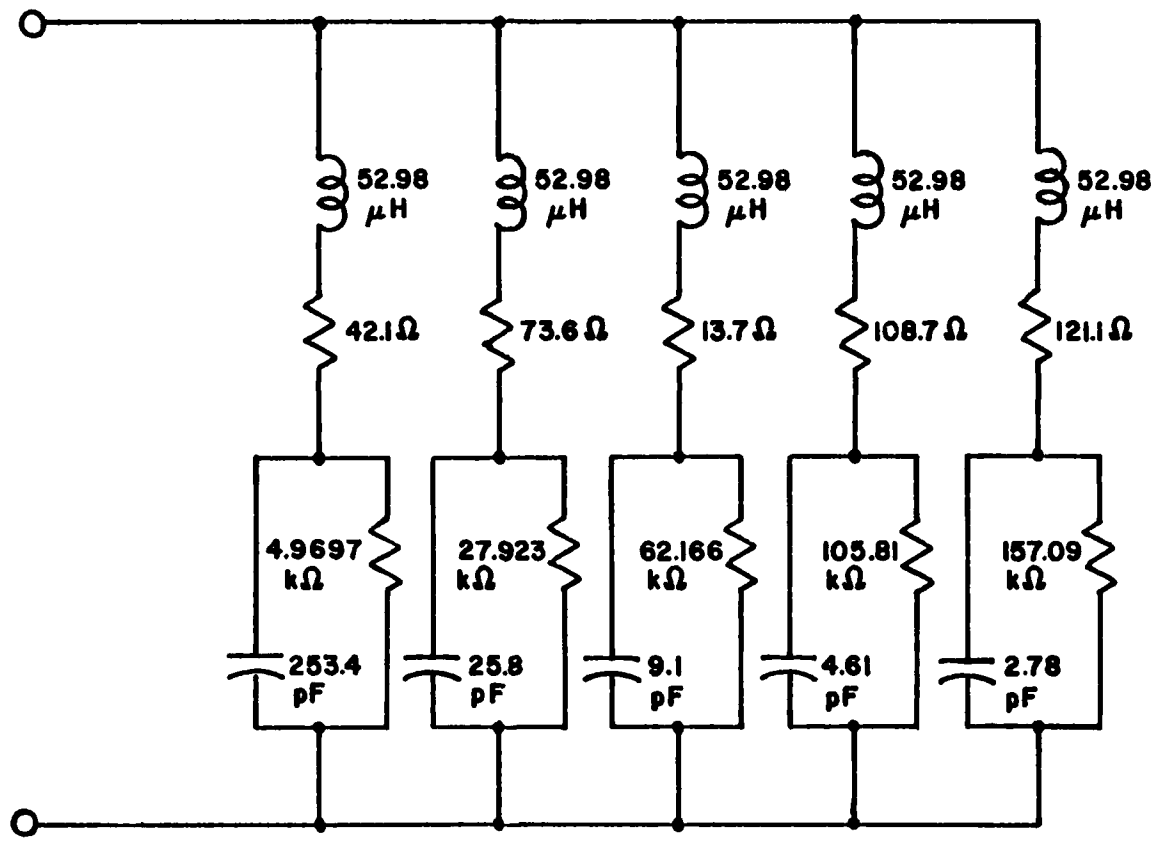

Figure 14. Equivalent network for the dipole antenna resulting from the approximation (41).

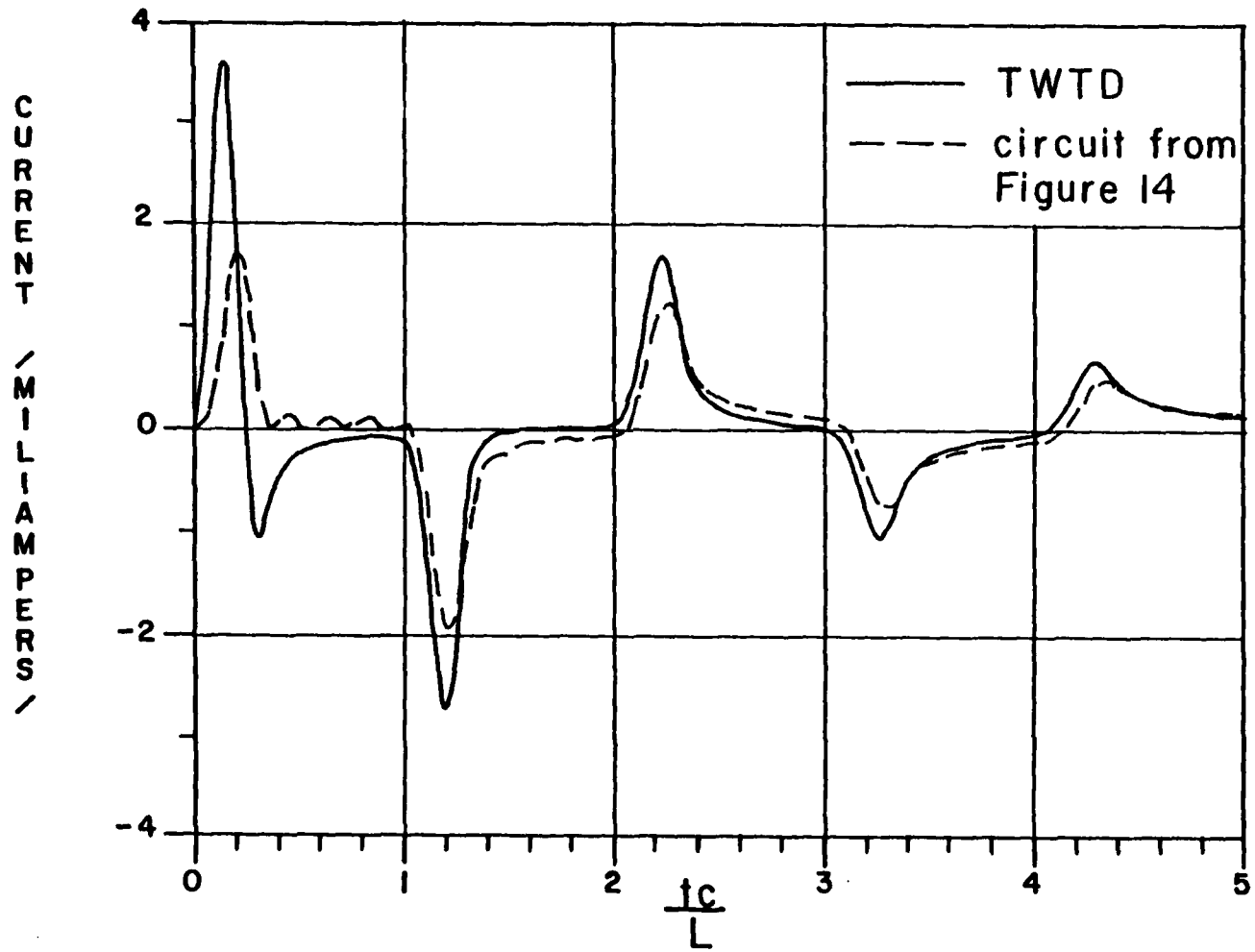

Figure 15. Transient response of the lumped circuit (Figure 14) and the result of the TWTD program analysis.

Section IV

SYNTHESIS OF MINIMUM BIQUADRATIC FUNCTIONS - GENERAL METHODS

It is shown in Section III that the equivalent network synthesis on pole-pair at a time basis leads in general to nonrealizable biquadratic modules for the dipole and loop wire antennas. The real part characteristic shown in Figure 4 is typical for these modules. It is also shown that the PR character of pole-pair admittances can be restored by negligible resistive padding. It is conceivable that this also holds for other (at least high-Q) structures.

After resistive padding we obtain a <u>minimum</u> biquadratic function. Thus, the function (6) for which the condition

$$(\sqrt{AF} - \sqrt{CD})^2 = BE \tag{42}$$

holds. In general, this will be a Class III function (see Figure 3), the real part of which is zero at some finite frequency ω_o (if it happens to be a Class I or Class II function it can be easily synthesized by the methods of Section III). From (8) and (42) it can be shown that

$$\omega_o^2 = \frac{AF + CD - BE}{2AD} = \sqrt{\frac{CE}{AD}} . \tag{43}$$

It is easy to see that the condition (42) can be satisfied by two different sets of coefficients for which

$$\sqrt{AF} - \sqrt{CD} = \sqrt{BE} \tag{44a}$$

or

$$\sqrt{AF} - \sqrt{CD} = - \sqrt{BE} \tag{44b}$$

These will be referred to as cases A and B respectively.

The imaginary part of $\tilde{Y}(j\omega)$ can be computed from

$$j\ \mathrm{Im}\{\tilde{Y}(j\omega)\} = \left.\frac{m_2 n_1 - m_1 n_2}{m_2^{\ 2} - n_2^{\ 2}}\right|_{s = j\omega}$$

which leads to

$$\mathcal{B}(\omega) = \mathrm{Im}\{\tilde{Y}(j\omega)\} = \omega\ \frac{(AE - BD)\omega^2 + (BF - CE)}{(F - D\omega^2)^2 + E^2\omega^2}\ . \tag{45}$$

At frequency ω_o, with the help of (43) and (44) we obtain

$$\mathcal{B}(\omega_o) = \omega_o \sqrt{\frac{AB}{EF}} > 0 \tag{46a}$$

for case A, and

$$\mathcal{B}(\omega_o) = -\omega_o \sqrt{\frac{AB}{EF}} < 0 \tag{46b}$$

for case B.

In the following, the synthesis procedures applicable to minimum Class III biquadratic functions are discussed.

4.1 BRUNE METHOD

Intrinsic to this method is the use of a perfect transformer. Thus, it is rather impractical and is seldom used, except as a last resort. On the other hand, the Brune network contains the minimum number of elements possible and thus can be convenient for analysis and modeling purposes.

At the frequency ω_o the whole impedance $\tilde{Z}(j\omega) = 1/\tilde{Y}(j\omega)$ is purely reactive

$$\tilde{Z}(j\omega) = jX(\omega_o) = \frac{1}{j\mathcal{B}(\omega_o)} \tag{47}$$

and can be represented by a single inductance

$$L_1 = \frac{-1}{\omega_o \mathcal{B}(\omega_o)}\ . \tag{48}$$

For the case A, using (43) and (46a) we obtain

$$L_1 = -\sqrt{\frac{DE}{BC}} \tag{49}$$

Although L_1 is negative we proceed to remove the impedance sL_1 from $\tilde{Z}(s)$:

$$\tilde{Z}_1(s) = \tilde{Z}(s) - sL_1 = \frac{Ds^2 + Es + F}{As^2 + Bs + C} + \sqrt{\frac{DE}{BC}}\, s \ . \tag{50}$$

We know that $\tilde{Z}(s)$ has a zero at $s = \pm j\omega_o$ thus the term $(s^2 + \omega_o^2)$ can be factored out in (50) to give

$$\tilde{Z}_1(s) = (s^2 + \omega_o^2)\ \frac{A\sqrt{\frac{DE}{BC}}\, s + A\sqrt{\frac{DF}{AC}}}{As^2 + Bs + C} \tag{51}$$

The zero of $\tilde{Z}_1$ can be removed as a pole from $\tilde{Y}_1(s) = 1/\tilde{Z}_1(s)$

$$\tilde{Y}_1(s) = \frac{2a_o s}{s^2 + \omega_o^2} + \tilde{Y}_2(s) \tag{52}$$

where the first term represents the admittance of a series L_2C_o circuit (Figure 16). The residue a_o can be easily computed as

$$2a_o = \frac{B}{F}\,\omega_o^2 = \frac{B}{F}\sqrt{\frac{CF}{AD}} \ . \tag{53}$$

The values of L_2 and C_o are given by

$$L_2 = \frac{1}{2a_o} = \frac{F}{B}\,\frac{1}{\omega_o^2} = \frac{F}{B}\sqrt{\frac{AD}{CF}} \tag{54}$$

$$C_o = \frac{1}{\omega_o^2 L_2} = \frac{B}{F} \ . \tag{55}$$

From (52) and (53) the impedance $\tilde{Z}_2 = 1/\tilde{Y}_2$ is obtained as

$$\tilde{Z}_2(s) = \frac{F}{C}\sqrt{\frac{AE}{BF}}\, s + \frac{F}{C} \tag{56}$$

which can be realized as a series L_3R circuit, where

$$L_3 = \frac{F}{C}\sqrt{\frac{AE}{BF}} \tag{57}$$

and

$$R = \frac{F}{C}\,. \tag{58}$$

The resulting network is shown in Figure 16. The negative inductance L_1 can be realized with the help of a perfect transformer. The network shown in Figure 17 results.

By development analogous to the above, it can be shown that this network is also valid for the case B.

As an example, the Brune equivalent network for the dipole antenna is shown in Figure 18. (The amount of resistive padding used is given in Table 4. For the first pole-pair admittance, which is a Class I function, the network (a) from Figure 7 was used.) The transient response of this network for the Gaussian pulse (Figure 12) is compared with the result of the TWTD analysis in Figure 19. Except for the early time, an excellent agreement is observed.

4.2 BOTT-DUFFIN METHOD

This is the most general transformerless synthesis method. It's main disadvantage in general application is the exponential growth of the number of elements required with the number of cycles needed to reduce the given function to a constant remainder. This difficulty is insignificant in the present application of synthesis of biquadratic functions. Therefore it is

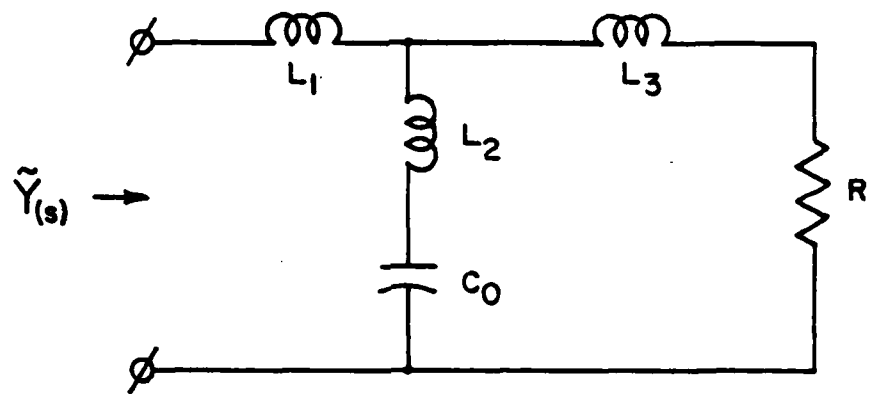

$$L_1 = -\sqrt{\frac{DE}{BC}} \qquad L_2 = \frac{F}{B}\sqrt{\frac{AD}{CF}}$$

$$L_3 = \frac{F}{C}\sqrt{\frac{AE}{BF}} \qquad C_0 = \frac{B}{F} \qquad R = \frac{F}{C}$$

Figure 16. Brune network for biquadratic.

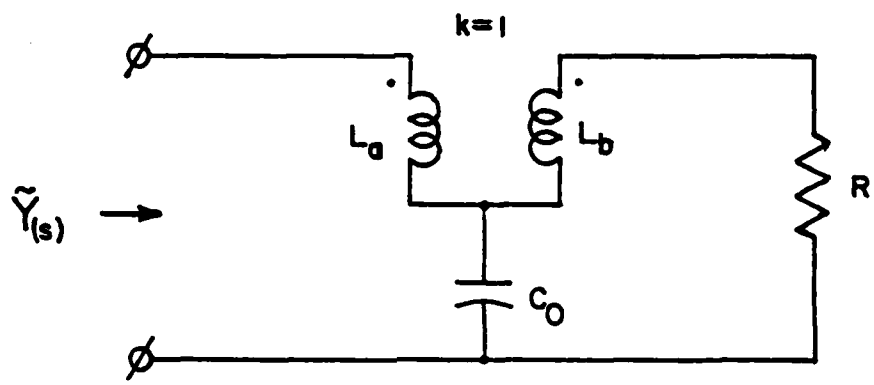

$$L_a = \frac{D}{B} \qquad L_b = \frac{AF}{BC}$$

$$M_{ab} = \frac{F}{B}\sqrt{\frac{AD}{CF}} \qquad C_0 = \frac{B}{F} \qquad R = \frac{F}{C}$$

Figure 17. Brune network for biquadratic - final form.

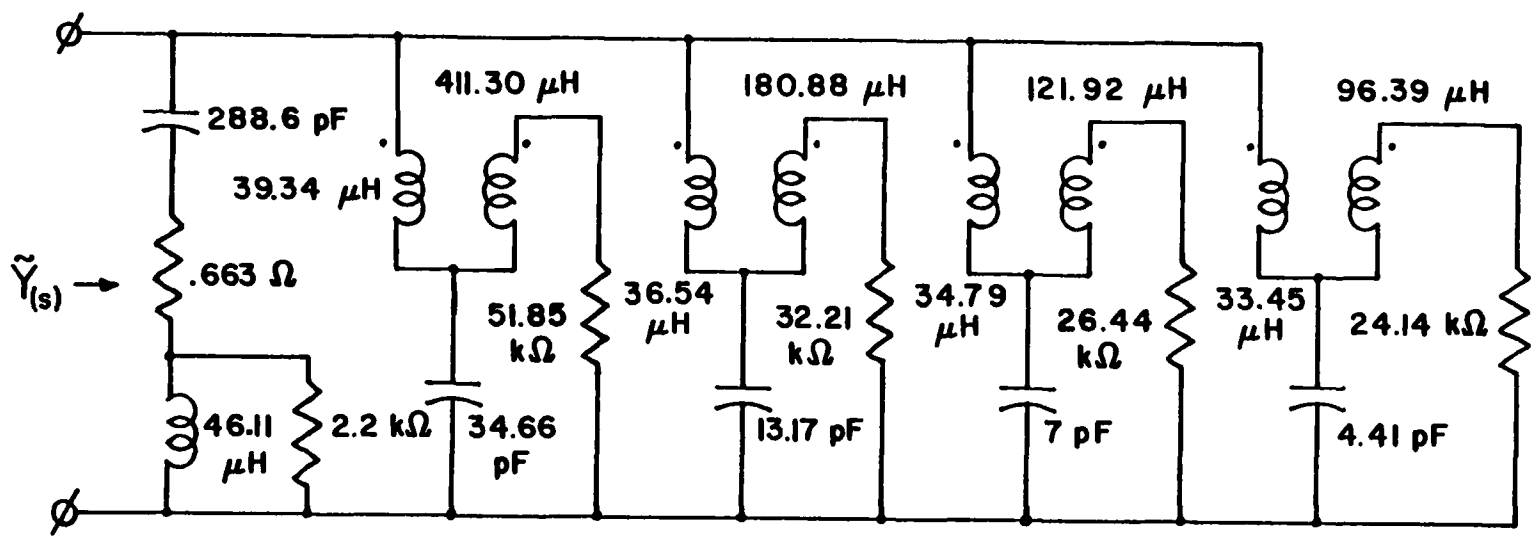

Figure 18. Brune equivalent network for dipole antenna.

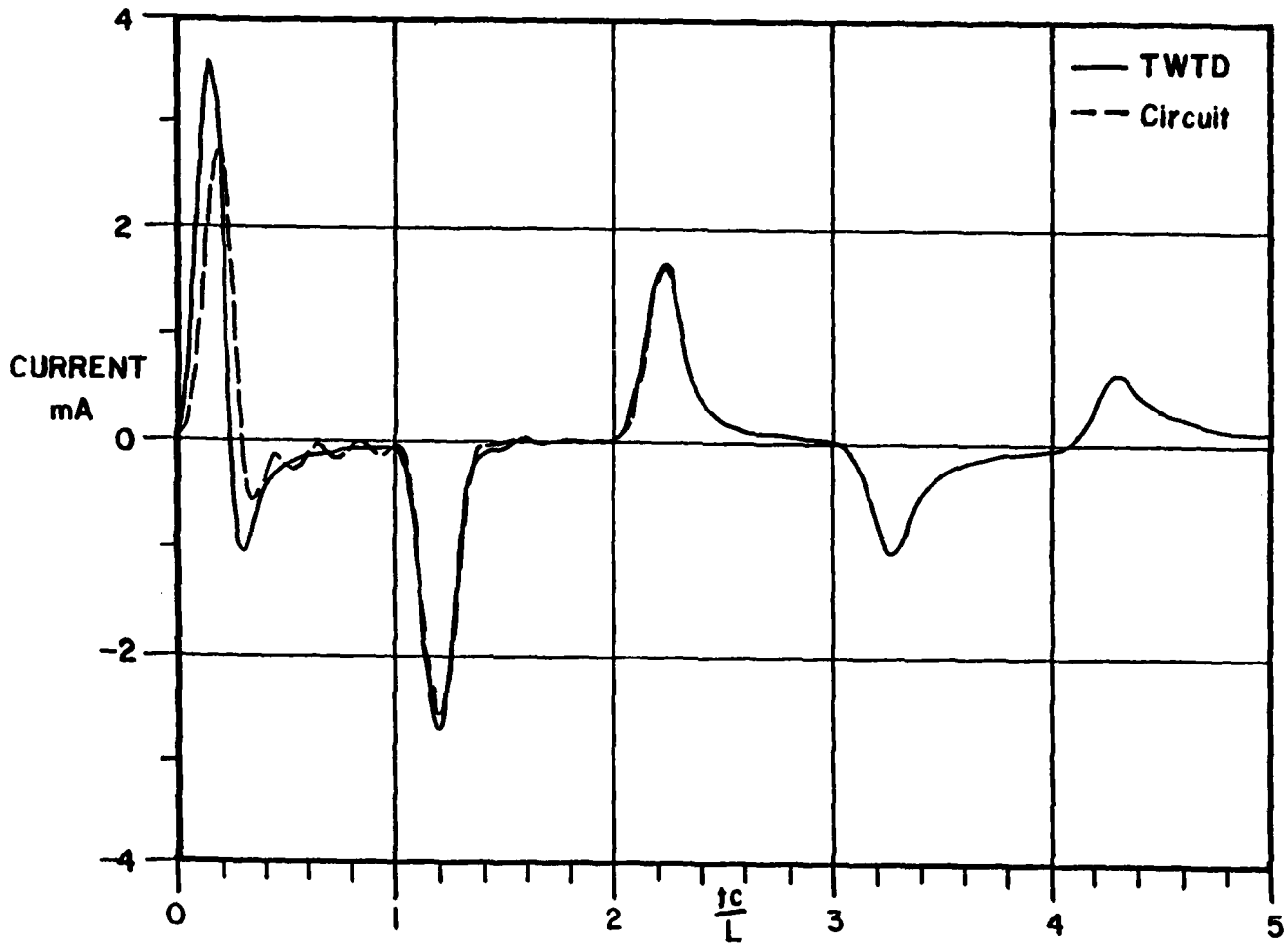

Figure 19. Transient response of the lumped circuit (Figure 18) and the result of TWTD program analysis.

considered in detail here.

In the Bott-Duffin procedure, one makes use of the Richards function

$$\tilde{R}(s) = \frac{k\tilde{Y}(s) - s\tilde{Y}(k)}{k\tilde{Y}(k) - s\tilde{Y}(s)} \tag{59}$$

in which k is a real positive constant. It may be shown that $\tilde{R}(s)$ is PR if $\tilde{Y}(s)$ is PR, and that the order of it (defined as the total number of its poles or zeros) is not higher than that of $\tilde{Y}(s)$.

The equation (59) can be solved for $\tilde{Y}(s)$ to give

$$\tilde{Y}(s) = \frac{1}{\tilde{Z}_1(s) + \frac{1}{sC_o}} + \frac{1}{\tilde{Z}_2(s) + sL_o} \tag{60}$$

where

$$\tilde{Z}_1(s) = \frac{\tilde{R}(s)}{Y(k)} \tag{61}$$

$$\tilde{Z}_2(s) = \frac{1}{Y(k)\ \tilde{R}(s)} \tag{62}$$

$$C_o = \frac{Y(k)}{k} \tag{63}$$

$$L_o = \frac{1}{kY(k)}\ . \tag{64}$$

This corresponds to the network shown in Figure 20. Note that the PR-ness of $\tilde{Y}(s)$ assures that the values C_o and L_o are positive and real.

It is easy to see that the network from Figure 20 is a balanced bridge with the points A and B on the same potential. Thus, any impedance (even a short circuit) can be placed in the detector arm A-B without affecting the input admittance of the circuit. This can be exploited to reduce by one the number of reactive elements necessary [27,32,37].

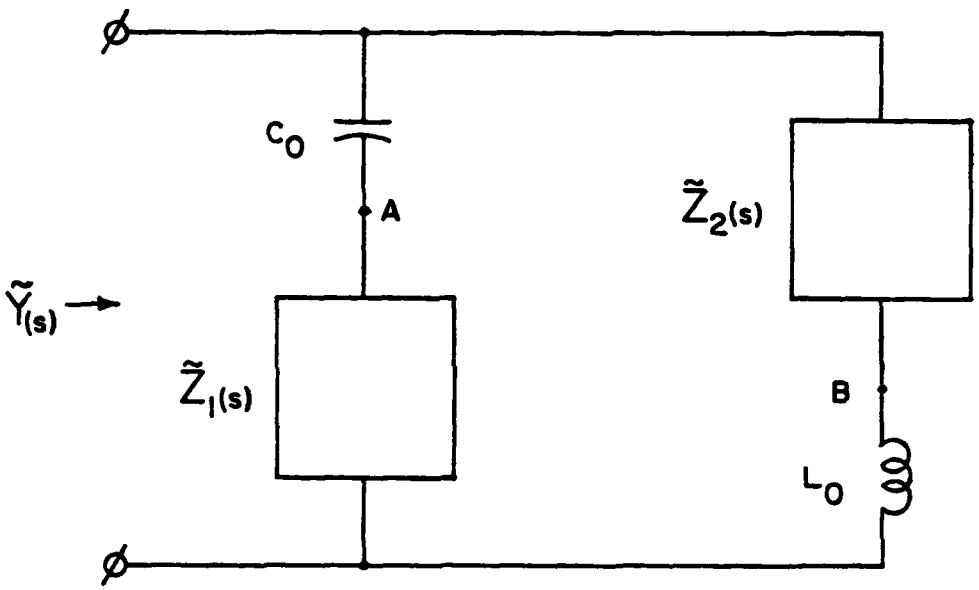

Figure 20. Illustration of the Bott-Duffin method: network corresponding to eq. (60).

At the frequency $s = j\omega_o$, from (60), we have

$$Y(j\omega_o) = j\mathcal{B}(\omega_o) = \frac{1}{\tilde{Z}_1(j\omega_o) + \frac{1}{j\omega_o C_o}} + \frac{1}{\tilde{Z}_2(j\omega_o) + j\omega_o L_o} \tag{65}$$

The special cases A and B referred to in the preceding section are treated separately.

Case A

Because $\mathcal{B}(\omega_o) > 0$ for this case, the only possibility in satisfying (65) occurs when $\tilde{Z}_1(j\omega_o) = 0$ and $\tilde{Z}_2(j\omega_o) = \infty$. From (61) and (62) we see that this requires that $\tilde{R}(s)$ have a zero at $s = j\omega_o$. This in turn requires that the numerator of (59) be equal to zero at this frequency:

$$k\tilde{Y}(j\omega_o) - j\omega_o Y(k) = 0 \tag{66}$$

or

$$\omega_o Y(k) - k\mathcal{B}(\omega_o) = 0. \tag{67}$$

From (67) with the help of (46a) the value of C_o can be computed as

$$C_o = \frac{Y(k)}{k} = \frac{\mathcal{B}(\omega_o)}{\omega_o} = \sqrt{\frac{AB}{EF}}\,. \tag{68}$$

In order to determine the value of L_o, eq. (67) must be solved for the real positive root k:

$$\frac{Ak^2 + Bk + C}{Dk^2 + Ek + F} - k\sqrt{\frac{AB}{EF}} = 0. \tag{69}$$

With the help of (44a) this equation leads to

$$k^3 - \sqrt{\frac{CE}{BD}}\,k^2 + \sqrt{\frac{CF}{AD}}\,k - \frac{C}{D}\sqrt{\frac{EF}{AB}} = 0. \tag{70}$$

Although (70) is a third order equation, the difficulty is an apparent one only, because we know the two of the roots: $k = \pm j\omega_o$. Thus, dividing (70) by $(k^2 + \omega_o^2)$ we find

$$k = \sqrt{\frac{CE}{BD}} \,. \tag{71}$$

From this equation and from (68) it follows that

$$Y(k) = \sqrt{\frac{AC}{DF}} \tag{72}$$

and

$$L_o = \frac{1}{kY(k)} = \frac{D}{C}\sqrt{\frac{BF}{AE}} \,. \tag{73}$$

The impedance $\tilde{Z}_1(s)$ has a zero at $s = j\omega_o$ and $\tilde{Z}_2(s)$ has a pole at this frequency. The poles of $1/\tilde{Z}_1(s)$ and $\tilde{Z}_2(s)$ can be removed by the following expansions

$$\frac{1}{\tilde{Z}_1(s)} = \frac{2a_1 s}{s^2 + \omega_o^2} + \frac{1}{R_1} \tag{74}$$

$$\tilde{Z}_2(s) = \frac{2a_2 s}{s^2 + \omega_o^2} + R_2 . \tag{75}$$

The residues a_1 and a_2 determine the values of the series-connected C_1 and L_1 and the parallel-connected C_2 and L_2 (see Figure 21).

In order to compute the residues a_1 and a_2 we note that the numerator and denominator of the Richards function must have the common factor (s-k) [49]. After dividing it out, with the help of (44a), (71), and (72), we get

$$\tilde{R}(s) = \frac{s^2 + \sqrt{\frac{CF}{AD}}}{\sqrt{\frac{AF}{CD}}\, s^2 + \left(\frac{E}{D} + \frac{B}{D}\sqrt{\frac{DF}{AC}}\right) s + \frac{F}{D}} \tag{76}$$

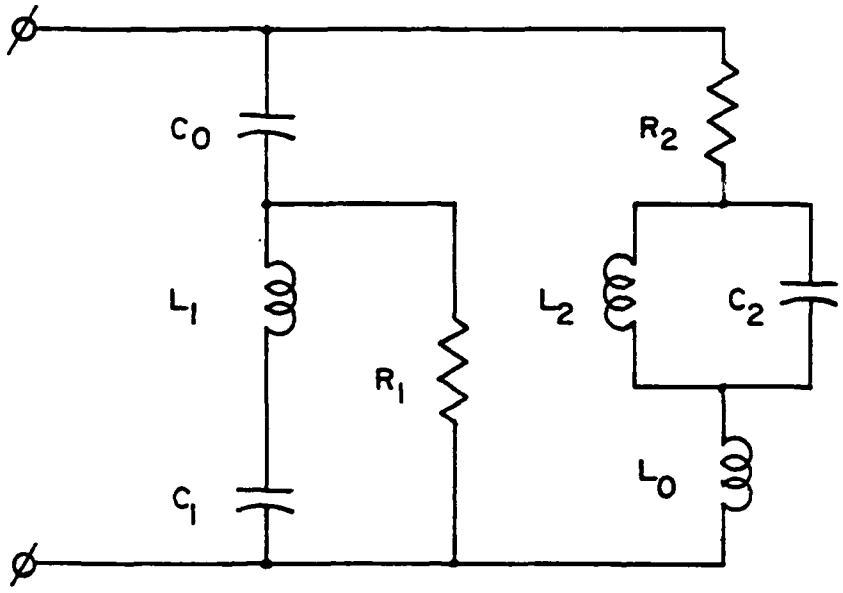

$$C_0 = \sqrt{\frac{AB}{EF}} \qquad R_2 = \frac{F}{C}$$

$$L_1 = \frac{D\sqrt{DF}}{M} \qquad L_2 = \frac{M}{C\sqrt{AC}}$$

$$C_1 = \frac{M}{DF}\sqrt{\frac{A}{C}} \qquad C_2 = \frac{AC}{M}\sqrt{\frac{D}{F}}$$

$$R_1 = \frac{D}{A} \qquad L_0 = \frac{D}{C}\sqrt{\frac{BF}{AE}}$$

$$M = B\sqrt{DF} + E\sqrt{AC}$$

Figure 21. Bott-Duffin network for the Case A.

and

$$\frac{1}{\tilde{Z}_1(s)} = \frac{\frac{M}{D\sqrt{DF}}\, s}{s^2 + \omega_o^2} + \frac{A}{D} \tag{77}$$

$$Z_2(s) = \frac{\frac{M}{AC}\sqrt{\frac{F}{D}}\, s}{s^2 + \omega_o^2} + \frac{F}{C} \tag{78}$$

where

$$M = B\sqrt{DF} + E\sqrt{AC}\ . \tag{79}$$

Comparing (77) and (78) with (74) and (75) we obtain

$$C_1 = \frac{2a_1}{\omega_o^2} = \frac{M}{DF}\sqrt{\frac{A}{C}} \tag{80}$$

$$L_1 = \frac{1}{2a_1} = \frac{D\sqrt{DF}}{M} \tag{81}$$

$$C_2 = \frac{1}{2a_2} = \frac{AC}{M}\sqrt{\frac{D}{F}} \tag{82}$$

$$L_2 = \frac{2a_2}{\omega_o^2} = \frac{M}{AC}\sqrt{\frac{A}{C}} \tag{83}$$

$$R_1 = \frac{D}{A} \tag{84}$$

$$R_2 = \frac{F}{C}\ . \tag{85}$$

The final network for the case A is shown in Figure 21.

Case B

In this case $\tilde{B}(\omega_o) < 0$ and (44b) and (46b) apply. From (65) we see

that $1/\tilde{Z}_1(j\omega_o) = 0$ and $\tilde{Z}_2(j\omega_o) = 0$ which, by virtue of (61), (62), and (59), leads to the condition

$$kY(k) - j\omega_o\tilde{Y}(j\omega_o) = 0 \tag{86}$$

or

$$kY(k) + \omega_o\mathcal{B}(\omega_o) = 0 \tag{87}$$

From (65) and (87), using (43) and (46b) we obtain

$$L_o = \frac{1}{kY(k)} = \frac{-1}{\omega_o\mathcal{B}(\omega_o)} = \sqrt{\frac{DE}{BC}}\,. \tag{88}$$

In order to determine the value of C_o equation (87) must be solved for k. With the substitutions (43) and (46b) we obtain

$$k\,\frac{Ak^2 + Bk + C}{Dk^2 + Ek + F} - \sqrt{\frac{BC}{DE}} = 0 \tag{89}$$

which, with the help of (44b) leads to the equation

$$k^3 - \sqrt{\frac{BF}{AE}}\,k^2 + \sqrt{\frac{CF}{AD}}\,k - \frac{F}{A}\sqrt{\frac{BC}{DE}} = 0. \tag{90}$$

Dividing (90) by $(k^2 + \omega_o^2)$, as in case A, we get

$$k = \sqrt{\frac{BF}{AE}}\,. \tag{91}$$

Using (88) we also have

$$Y(k) = \sqrt{\frac{AC}{DF}} \tag{92}$$

and

$$C_o = \frac{Y(k)}{k} = \frac{A}{F}\sqrt{\frac{CE}{BD}}\,. \tag{93}$$

The Richards function can be expressed as

$$\tilde{R}(s) = \frac{\sqrt{\frac{CD}{AF}}\, s^2 + \left(\frac{E}{A}\sqrt{\frac{AC}{DF}} + \frac{B}{A}\right) s + \frac{C}{A}}{s^2 + \sqrt{\frac{CF}{AD}}} . \tag{94}$$

The poles of $\tilde{Z}_1(s)$ and $1/\tilde{Z}_2(s)$ can be removed similarly as in case A

$$\tilde{Z}_1(s) = \frac{2a_1 s}{s^2 + \omega_o^2} + R_1 \tag{95}$$

$$\frac{1}{\tilde{Z}_2(s)} = \frac{2a_2 s}{s^2 + \omega_o^2} + \frac{1}{R_2} . \tag{96}$$

Using (61), (62), and (94) we obtain

$$Z_1(s) = \frac{\frac{M}{A\sqrt{AC}}\, s}{s^2 + \omega_o^2} + \frac{D}{A} , \tag{97}$$

and

$$\frac{1}{\tilde{Z}_2(s)} = \frac{\frac{M}{DF}\sqrt{\frac{C}{A}}\, s}{s^2 + \omega_o^2} + \frac{C}{F} , \tag{98}$$

where M is defined as in case A. Comparison with (95) and (96) gives

$$C_1 = \frac{1}{2a_1} = \frac{A\sqrt{AC}}{M} , \tag{99}$$

$$L_1 = \frac{2a_1}{\omega_o^2} = \frac{M}{AC}\sqrt{\frac{D}{F}} , \tag{100}$$

$$C_2 = \frac{2a_2}{\omega_o^2} = \frac{M}{F\sqrt{DF}} , \tag{101}$$

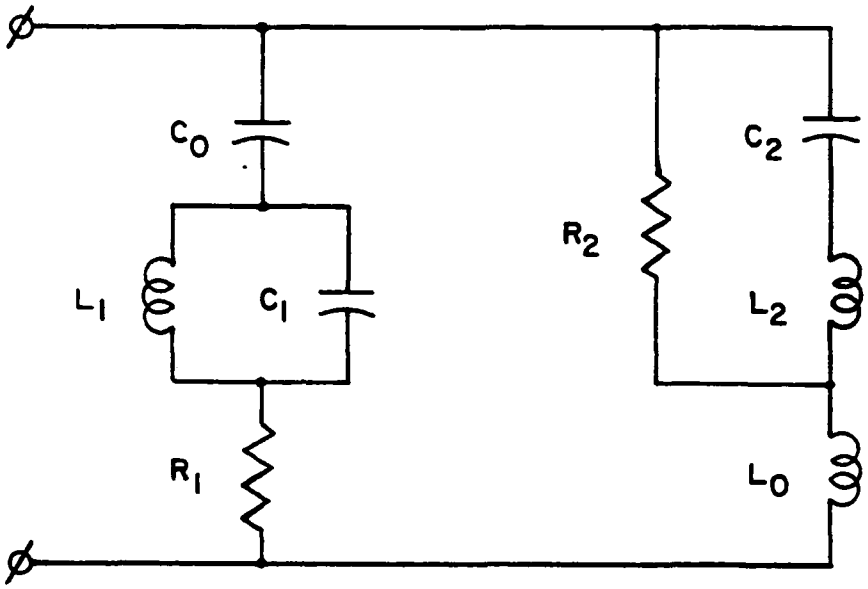

$$C_0 = \frac{A}{F}\sqrt{\frac{CE}{BD}} \qquad R_2 = \frac{F}{C}$$

$$C_2 = \frac{M}{F\sqrt{DF}} \qquad L_2 = \frac{DF}{M}\sqrt{\frac{A}{C}}$$

$$L_1 = \frac{M}{AC}\sqrt{\frac{D}{F}} \qquad C_1 = \frac{A\sqrt{AC}}{M}$$

$$R_1 = \frac{D}{A} \qquad L_0 = \sqrt{\frac{DE}{BC}}$$

$$M = B\sqrt{DF} + E\sqrt{AC}$$

Figure 22. Bott-Duffin network for the Case B.

$$L_2 = \frac{1}{2a_2} = \frac{DF}{M}\sqrt{\frac{A}{C}} , \tag{102}$$

$$R_1 = \frac{D}{A} , \tag{103}$$

and

$$R_2 = \frac{F}{C} . \tag{104}$$

The final network for the case B is shown in Figure 22.

Modified networks

As was mentioned previously, in both cases A and B one element can be spared by placing appropriate reactance in the detect detector arm A-B and performing delta-T or T-delta transformation. It has been shown by Balabanian and Cahn [2] that in order for the T-delta transformation to be physically realizable the impedance $\tilde{Z}_b$ (see Figure 23) must be inverse to $\tilde{Z}_c$ and $\tilde{Z}_a$ must be inverse to the sum of the first two. Similar conditions must hold for the delta-T transformation. It is easy to see that the networks shown in Figure 24 satisfy the above conditions if the resonance frequencies of the circuits formed by L_aC_a and L_bC_b are equal. Thus if

$$L_aC_a = L_cC_b = \frac{1}{\omega_o^2} . \tag{105}$$

The relations between the elements in the T and Delta networks are also given in Figure 24 [11].

Consider the case A first. From the above considerations it follows that a capacitor C_b should be placed between the points A and B in Figure 21, the value of which is given by condition (105) as

$$C_b = \frac{A}{F}\sqrt{\frac{CE}{BD}} . \tag{106}$$

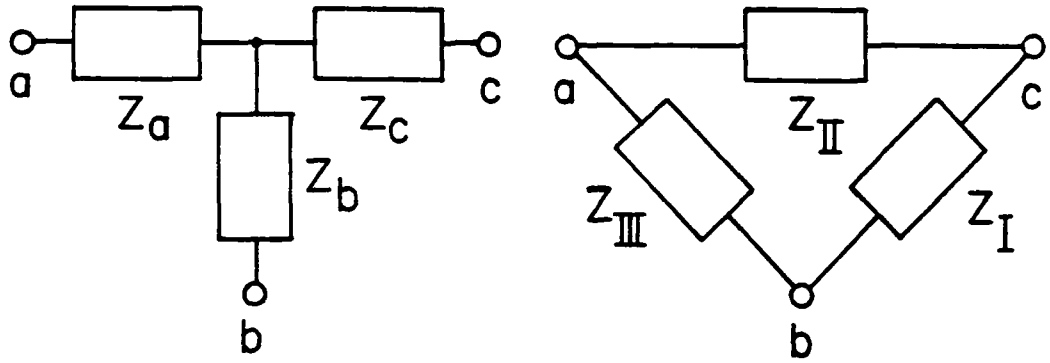

Figure 23. Illustration of the T-delta transformation.

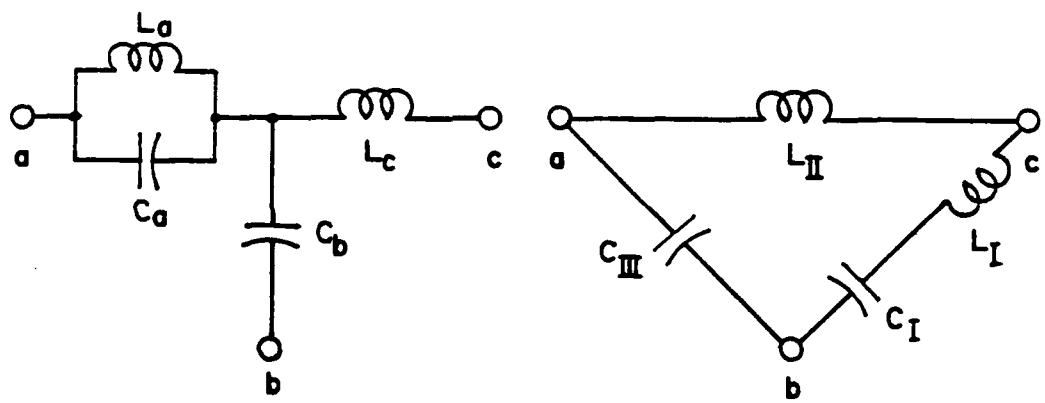

$$C_a = (C_I + C_{III})\frac{C_{III}}{C_I} \qquad L_a = \frac{1}{\omega_0^2 C_a} \qquad C_I = \frac{C_b^2}{C_a + C_b}$$

$$L_I = \frac{1}{\omega_0^2 C_I} \qquad C_b = C_I + C_{III} \qquad L_c = \frac{1}{\omega_0^2 C_b}$$

$$C_{III} = \frac{C_a C_b}{C_a + C_b} \qquad L_{II} = \frac{1}{\omega_0^2 C_{III}} \qquad L_a C_a = L_c C_b = \frac{1}{\omega_0^2}$$

Figure 24. T-delta transformation used to simplify the Bott-Duffin networks.

After replacing the T which appears to the right (Figure 21) by delta, the network shown in Figure 25(a) results. The equivalent network given in Figure 25(b) is obtained when the delta which appears at the bottom in Figure 21 is replaced by T.

For the case B, by analogous procedure, by placing an inductor

$$L_c = \frac{D}{C}\sqrt{\frac{BF}{AE}} \tag{107}$$

in the detector arm of the network in Figure 22, we obtain the two equivalent modified Bott-Duffin networks given in Figure 26.

It should be pointed out that, although the two networks given in Figure 25 are fully equivalent, one of them may have more desirable element values from the realization point of view. The same holds for the networks in Figure 26.

As can be seen in Figures 25 and 26, the Bott-Duffin networks even in the reduced form, are more complicated than the Brune network (Figure 17). Apparently the price we pay to avoid transformers is extra elements.

Simplified Bott-Duffin Networks

It is of interest to note that all pole-pair modules for the dipole and loop wire antennas qualify for the case A, i.e. at the zero real part frequency ω_o they can be approximately represented by a single capacitance C_o given by (68).

Real part characteristic of a typical modified pole-pair module, before and after padding, is shown in Figure 27. From Figures 27 and 21 it is evident that $R_2 = 1/G$. If the padding G is really negligible, R_2 is a large resistance. Consequently, the whole branch in series with R_2 contributes insignificantly to the total admittance and can be neglected.

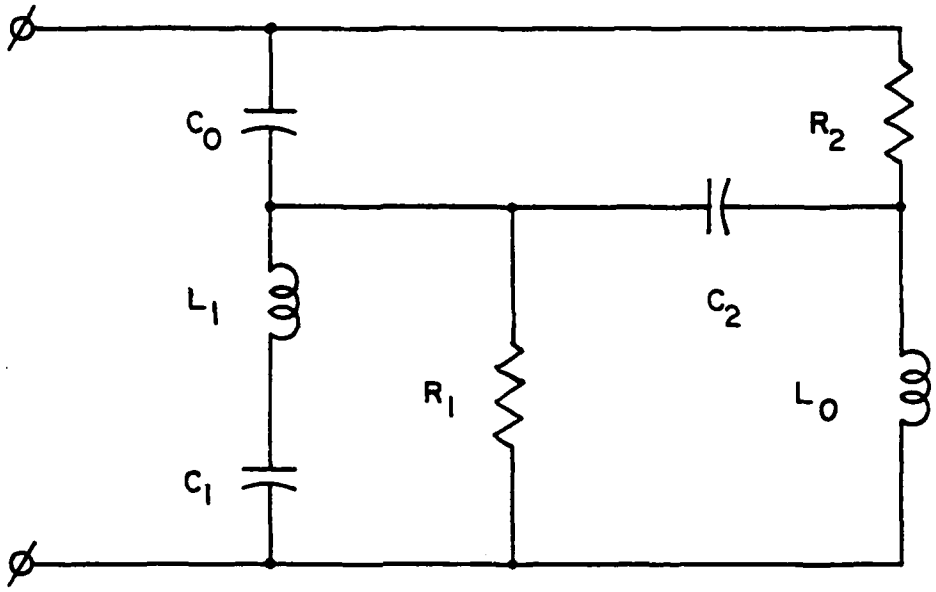

$$C_0 = \sqrt{\frac{AB}{EF}} \qquad C_2 = \frac{AC}{R}\sqrt{\frac{DE}{AF}}$$

$$R_2 = \frac{F}{C} \qquad L_1 = \frac{RD\sqrt{BD}}{M^2}$$

$$R_1 = \frac{D}{A} \qquad L_0 = \frac{R}{C\sqrt{CE}}$$

$$C_1 = \frac{M^2}{RCD}\sqrt{\frac{AC}{BF}} \qquad R = F\sqrt{BD} + E\sqrt{CE}$$

$$M = B\sqrt{DF} + E\sqrt{AC}$$

(a)

Figure 25. Modified Bott-Duffin networks for the Case A.

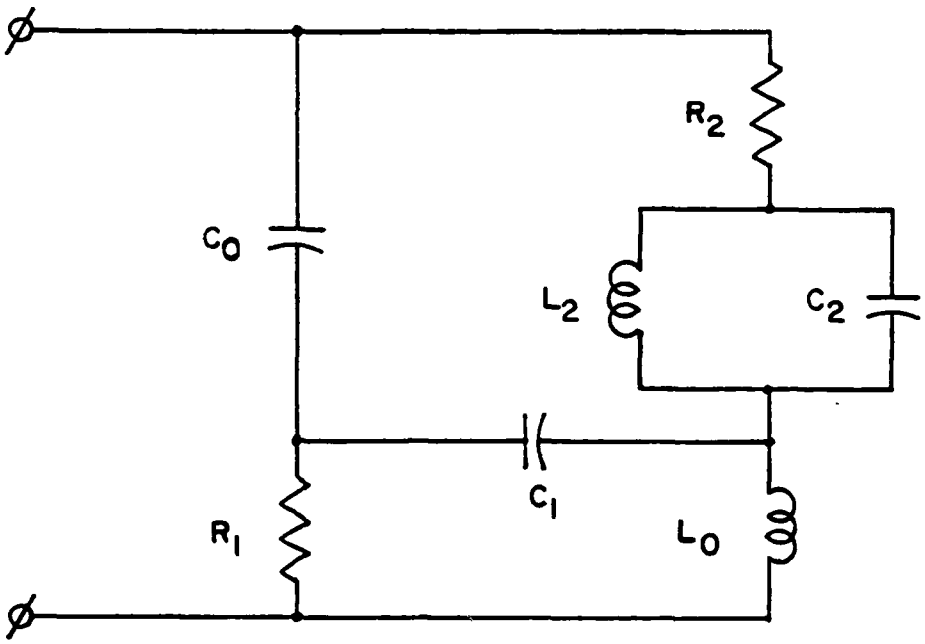

$$C_0 = \sqrt{\frac{AB}{EF}} \qquad R_2 = \frac{F}{C}$$

$$L_2 = \frac{M^2}{QC\sqrt{EC}} \qquad C_2 = \frac{QAC}{M^2}\sqrt{\frac{DE}{AF}}$$

$$R_1 = \frac{D}{A} \qquad C_1 = \frac{Q}{CD}\sqrt{\frac{AC}{BF}}$$

$$L_0 = \frac{D\sqrt{BD}}{Q} \qquad Q = A\sqrt{CE} + B\sqrt{BD}$$

$$M = B\sqrt{DF} + E\sqrt{AC}$$

(b)

Figure 25 (Continued).

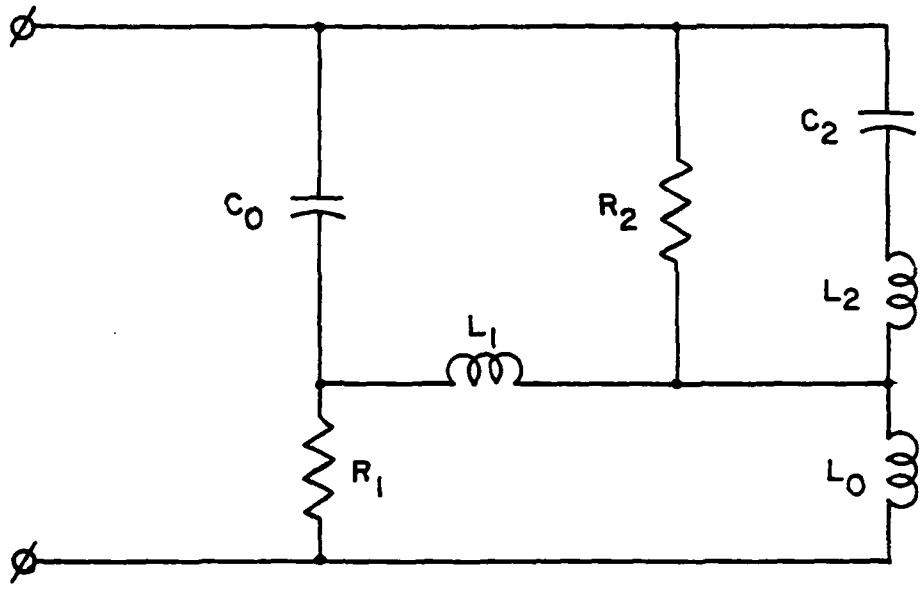

$$C_0 = \frac{A\sqrt{AE}}{Q} \qquad R_2 = \frac{F}{C}$$

$$C_2 = \frac{M^2}{QF\sqrt{BF}} \qquad L_2 = \frac{QAF}{M^2}\sqrt{\frac{BD}{AC}}$$

$$R_1 = \frac{D}{F} \qquad L_1 = \frac{Q}{AC}\sqrt{\frac{CD}{EF}}$$

$$L_0 = \sqrt{\frac{DE}{BC}} \qquad Q = D\sqrt{BF} + E\sqrt{AE}$$

$$M = B\sqrt{DF} + E\sqrt{AC}$$

(a)

Figure 26. Modified Bott-Duffin networks for the Case B.

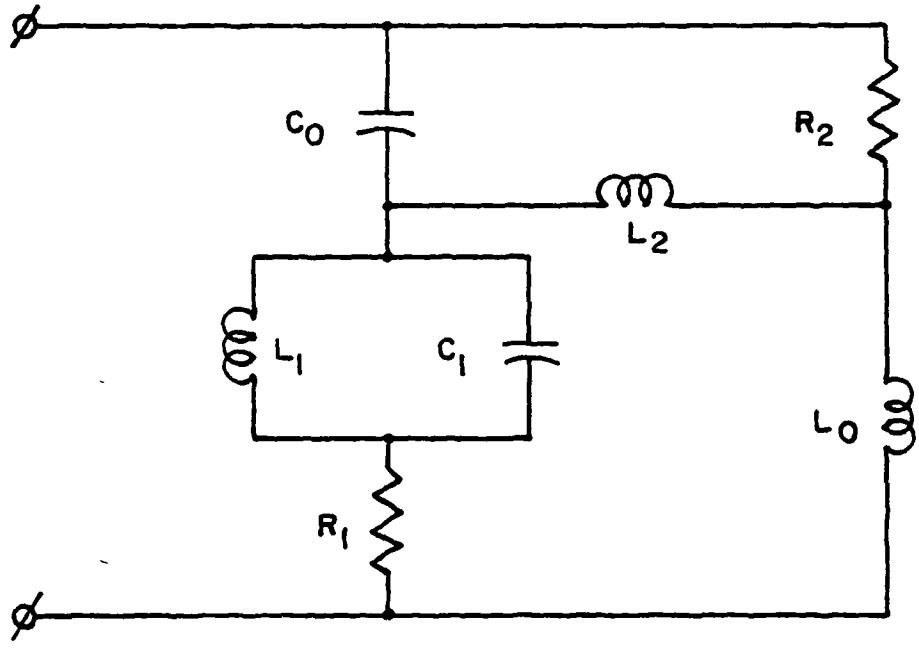

$$C_0 = \frac{R}{F\sqrt{BF}} \qquad L_2 = \frac{AF}{R}\sqrt{\frac{BD}{AC}}$$

$$R_2 = \frac{F}{C} \qquad L_1 = \frac{M^2}{RAC}\sqrt{\frac{CD}{EF}}$$

$$C_1 = \frac{RA\sqrt{AE}}{M^2} \qquad L_0 = \sqrt{\frac{DE}{BC}}$$

$$R_1 = \frac{D}{A} \qquad R = C\sqrt{AE} + B\sqrt{BF}$$

$$M = B\sqrt{DF} + E\sqrt{AC}$$

(b)

Figure 26 (Continued).

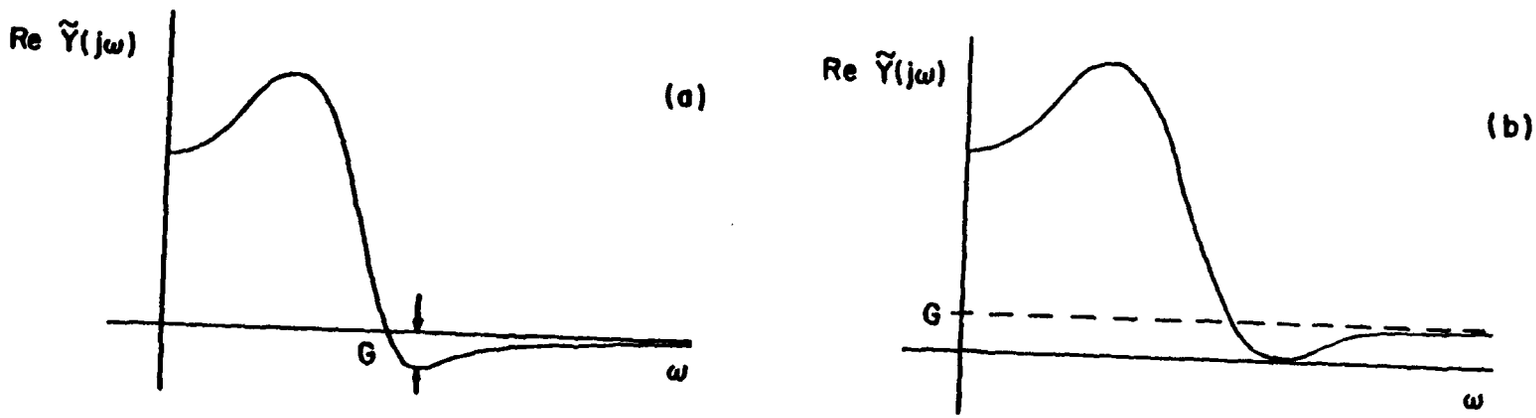

Figure 28. Real part characteristic of a pole-pair module for a hypothetical structure. (a) Before padding, and (b) after padding.

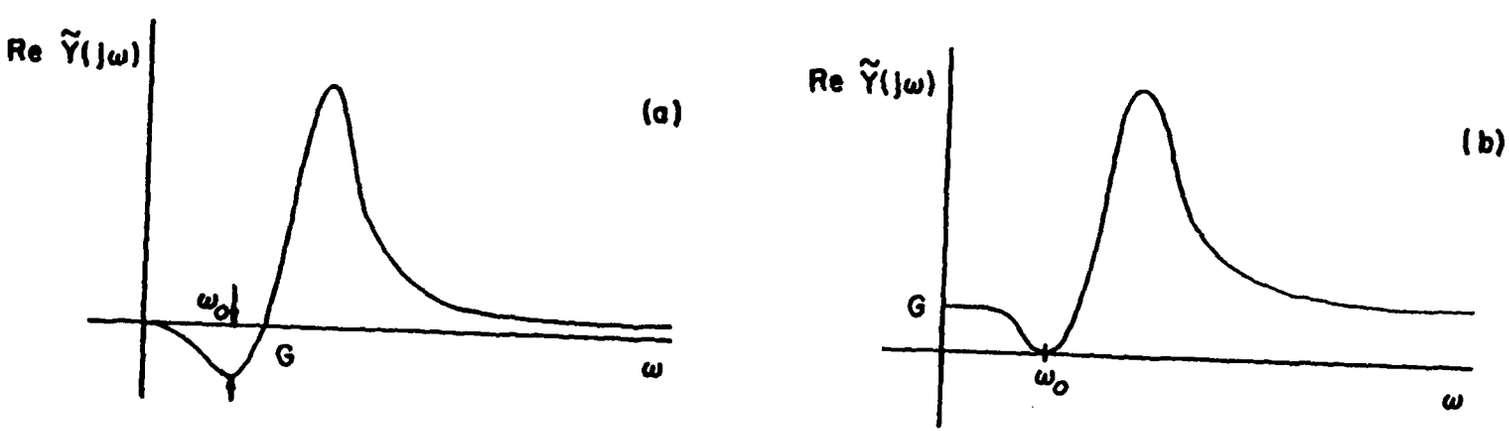

Figure 27. Real part characteristic of a modified pole-pair module typical for the dipole and loop antennas. (a) Before padding, and (b) after padding.

This simplification was first discovered by Streable and Pearson [39].

It is conceivable that for some structures, made of a non-perfectly conducting material, the real part characteristic of pole-pair admittances has the form shown in Figure 28. Then, if the case B applies, the resistor $R_1 = 1/G$ in Figure 22 is large and the whole branch in series with R_1 can be neglected.

The simplified Bott-Duffin networks for both cases A and B are shown in Figure 29.

The admittance of the simplified Bott-Duffin network for case A (see Figure 29 (a)) is given by

$$\tilde{Y}(s) = \frac{s\left[As^2 + \left(B + E\sqrt{\frac{AC}{DF}}\right)s + F\sqrt{\frac{AC}{DF}}\right]}{\left(s + \sqrt{\frac{CE}{BD}}\right)\left(Ds^2 + Es + F\right)} .$$

This is a third order function which approximates the original second order admittance (6). Note that besides the original poles, an additional real pole (which happens to be close to the origin for thin wire dipole and loop antennas) is introduced. Also a zero at the origin is added. It is evident that for higher frequencies the added zero and pole will approximately cancel and this function will differ insignificantly from the original one.

The equivalent network for the dipole antenna using the simplified Bott-Duffin module from Figure 29 (a) is shown in Figure 30.[1]

The transient response of this network for the Gaussian pulse (Figure 11) is compared in Figure 31 with the result of TWTD analysis. The agreement is excellent except for the early time. Corresponding results for the loop antenna are shown in Figures 31A and 31B.

[1]The first pole-pair module was realized by the method given in Section III.

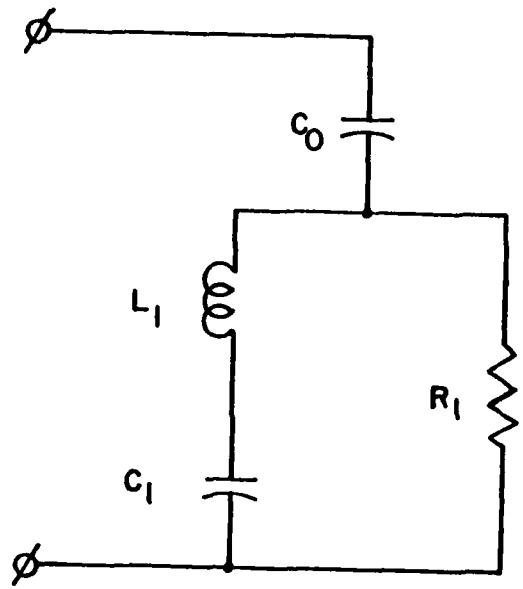

$$C_0 = \sqrt{\frac{AB}{EF}} \qquad L_1 = \frac{D\sqrt{DF}}{M}$$

$$C_1 = \frac{M}{DF}\sqrt{\frac{A}{C}} \qquad R_1 = \frac{D}{A}$$

$$\sqrt{AF} - \sqrt{CD} = \sqrt{BE}$$

(a)

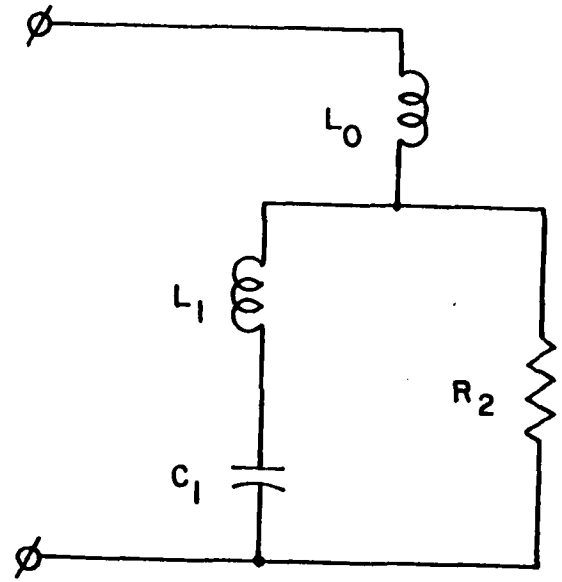

$$L_0 = \sqrt{\frac{DE}{BC}} \qquad L_1 = \frac{DF}{M}\sqrt{\frac{A}{C}}$$

$$C_1 = \frac{M}{F\sqrt{DF}} \qquad R_2 = \frac{F}{C}$$

$$\sqrt{AF} - \sqrt{CD} = -\sqrt{BE}$$

(b)

Figure 29. Simplified Bott-Duffin networks for the Cases A (a) and B (b).

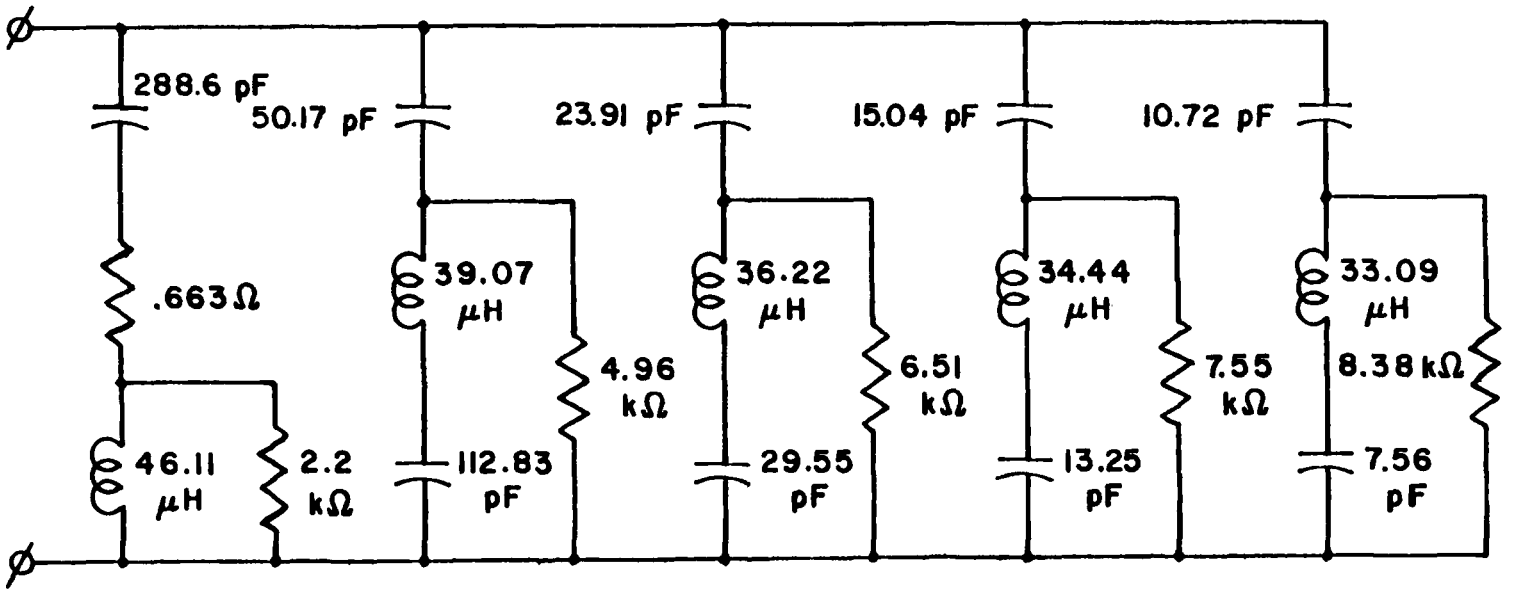

Figure 30. Simplified Bott-Duffin equivalent network for the dipole antenna.

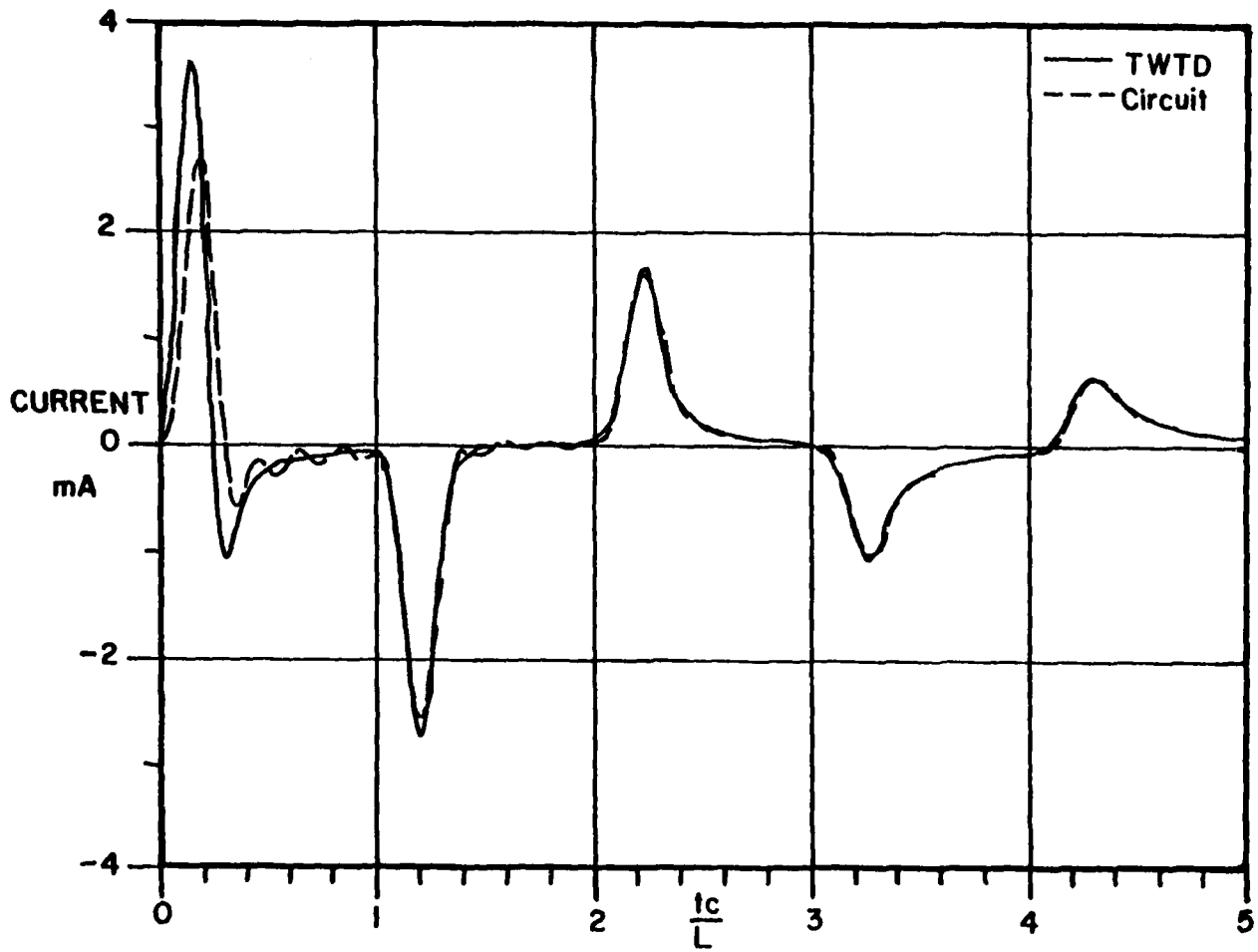

Figure 31. Transient response of the lumped circuit (Figure 30) and the result of TWTD program analysis.

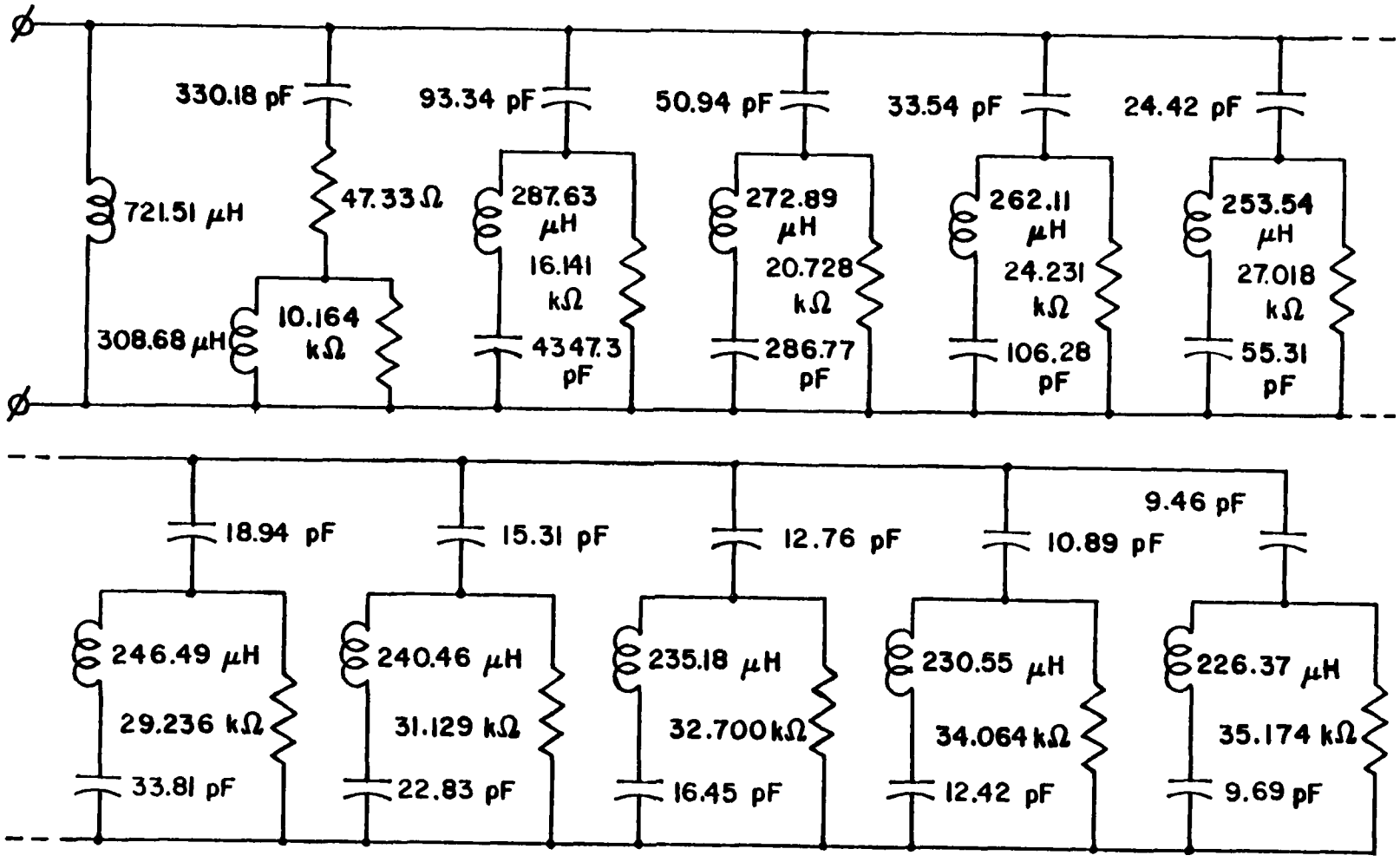

Figure 31A. Simplified Bott-Duffin equivalent network for the loop antenna.

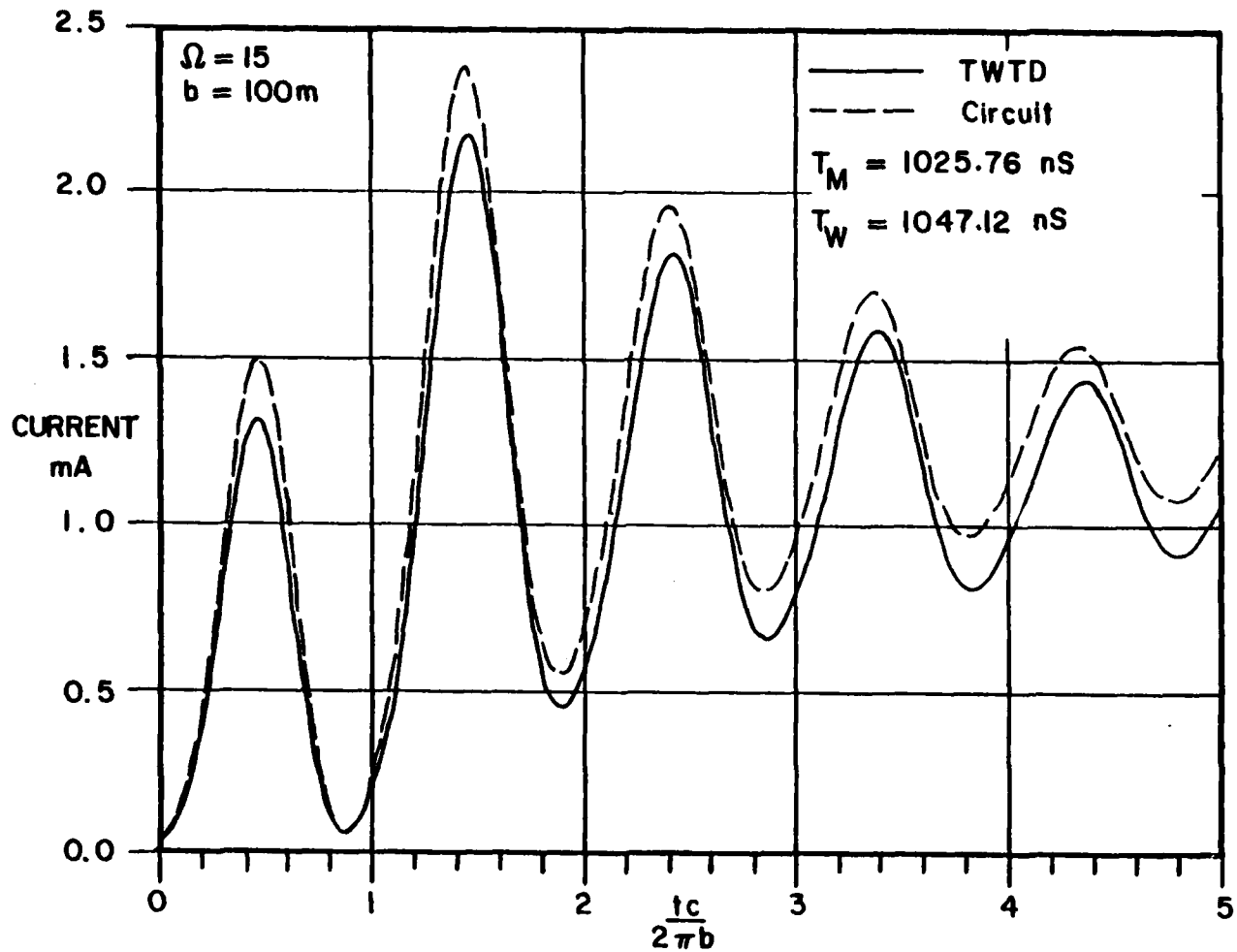

Figure 31B. Transient response of the lumped circuit (Figure 31A) and the result of the TWTD program analysis.

4.3 DARLINGTON METHOD

In this method we seek the realization of a given function

$$\tilde{Z}(s) = \frac{m_1 + n_1}{m_2 + n_2} \tag{108}$$

in a form of an input impedance of a lossless two-port terminated in a single resistor (Figure 32). Thus, $\tilde{Z}(s)$ can be written in the form

$$\tilde{Z}(s) = \frac{Rz_{11} + |z|}{R + z_{22}} = z_{11} \frac{1 + \frac{|z|}{Rz_{11}}}{1 + \frac{z_{22}}{R}} \tag{109}$$

where the z_{ij}'s are the open-circuit admittance functions.

By comparison with (109), (108) can be rewritten in two ways as follows:

$$\tilde{Z}(s) = \frac{m_1}{n_2} \frac{1 + n_1/m_1}{1 + m_2/n_2} \; ; \qquad \text{(case A)} \tag{110}$$

and

$$\tilde{Z}(s) = \frac{n_1}{m_2} \frac{1 + m_1/n_1}{1 + n_2/m_2} \qquad \text{(case B)} \; . \tag{111}$$

Thus, we can make the following identifications.

Case A	Case B		
$z_{11} = \frac{m_1}{n_1}$	$z_{11} = \frac{n_1}{m_2}$	(a)	
$\frac{z_{22}}{R} = \frac{m_2}{n_2}$	$\frac{z_{22}}{R} = \frac{n_2}{m_2}$	(b)	(112)
$\frac{z_{12}}{R} = \frac{\sqrt{N(-s^2)}}{n_2}$	$\frac{z_{12}}{R} = \frac{\sqrt{-N(-s^2)}}{n_2}$,	(c)	

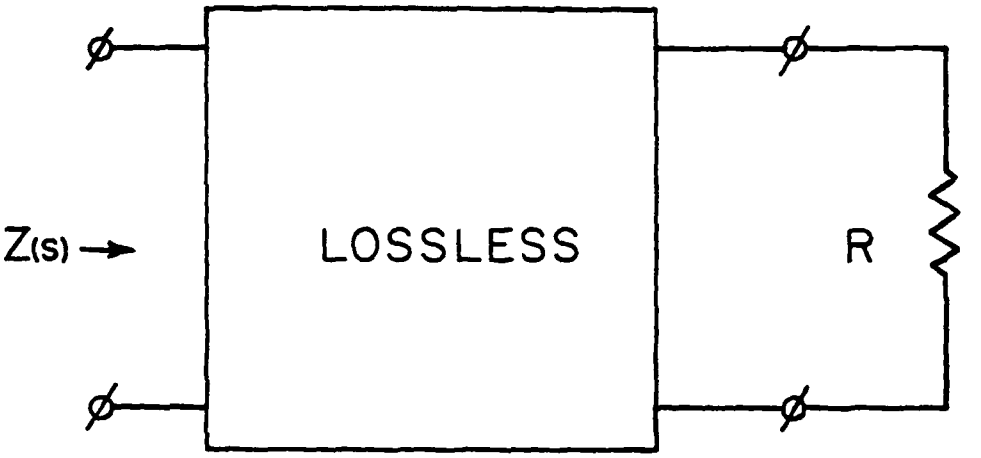

Figure 32. Illustration of the Darlington procedure.

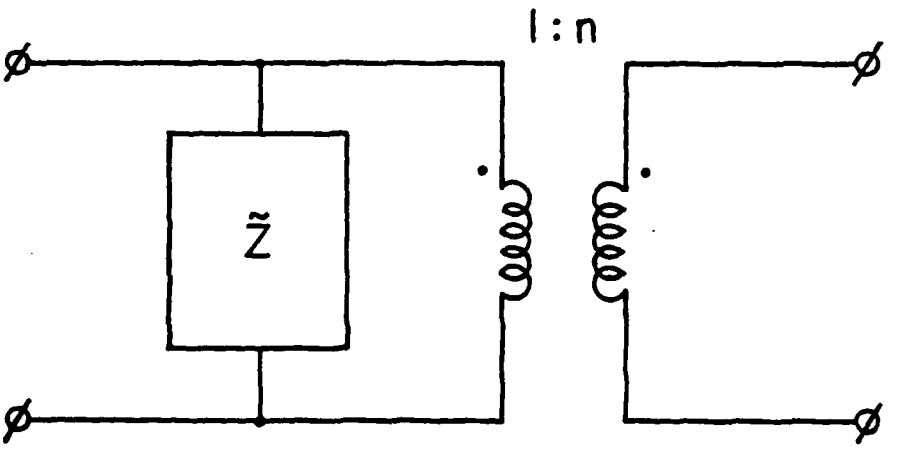

Figure 33. Cauer realization: component two-port for a compact pole.

with

$$N(-s^2) = m_1 m_2 - n_1 n_2 \,. \tag{113}$$

It is easy to see that z_{11} and z_{22}, being the ratios of odd and even parts of Hurwitz polynomials, are realizable reactance functions. In order to satisfy the conditions of realizability of a lossless two-port we must require that z_{12} be a rational function ($N(-s^2)$ or $-N(-s^2)$ must be a complete square) and the residue condition

$$k_{11}k_{22} - k_{12}^{\;2} \geq 0 \tag{114}$$

be satisfied at all the poles [1,16].

For all finite poles $s_i = j\omega_i$, in the case A, this condition takes the form

$$\left.\frac{m_1}{\frac{dn_2}{ds}}\right|_{s = j\omega_i} \cdot \left.\frac{m_2 12}{\frac{dn_2}{ds}}\right|_{s = j\omega_i} - \left.\frac{m_1 m_2 R}{\left(\frac{dn_2}{ds}\right)^2}\right|_{s = j\omega_i} = 0. \tag{115}$$

Thus, the residue condition is satisfied with the equality sign at all finite poles (the poles are compact). Similar conclusion holds for case B.

The set of three rational functions z_{11}, z_{22}, and z_{12} for which the residue condition (114) is satisfied at each pole can be synthesized by the Cauer realization procedure [1,49]. In this method the set of z parameters (112) is expanded in partial fractions as follows

$$\begin{aligned}
z_{11} &= \left[\frac{k_{11}^{(0)}}{s}\right] + \left[k_{11}^{(\infty)} s\right] + \left[\frac{2k_{11}^{(1)} s}{s^2 + \omega_1^{\,2}}\right] \\
z_{22} &= \left[\frac{Rk_{22}^{(0)}}{s}\right] + \left[Rk_{22}^{(\infty)} s\right] + \left[\frac{2Rk_{22}^{(1)} s}{s^2 + \omega_1^{\,2}}\right] \\
z_{12} &= \left[\frac{\sqrt{R}\, k_{12}^{(0)}}{s}\right] + \left[\sqrt{R}\, k_{12}^{(\infty)} s\right] + \left[\frac{\sqrt{R}\, k_{12}^{(1)} s}{s^2 + \omega_1^{\,2}}\right] ,
\end{aligned} \tag{116}$$

where only one pair of finite j-axis poles has been explicitly shown. Next, the parameters in each of the brackets are realized as a two-port and the complete realization is obtained as a series connection of these components.

If the poles are compact, the component two-port can be synthesized by the network shown in Figure 33. The open-circuit impedance functions for this network are

$$z_{11} = Z, \quad z_{22} = n^2 Z, \text{ and } z_{12} = nZ \ . \tag{117}$$

The parameters in any one of the brackets in eq. (116) can be represented as

$$\begin{aligned} z_{11} &= k_{11} g(s), \\ z_{22} &= R k_{22} g(s), \\ \text{and} \quad z_{12} &= \sqrt{R}\, k_{12} g(s), \end{aligned} \tag{118}$$

where $g(s)$ represents $1/s$, s, or $2s/(s^2 + \omega_1^2)$.

Comparison of (117) and (118) gives

$$Z = k_{11} g(s) \ , \tag{119}$$

and

$$n = \sqrt{R}\, \frac{k_{22}}{k_{12}} \ . \tag{120}$$

It is evident from (120) that the ideal transformer associated with the given pole can be avoided by choosing

$$R = \frac{k_{12}^{\ 2}}{k_{22}^{\ 2}} \ . \tag{121}$$

Returning to the biquadratic function (6) we have

$$\begin{aligned} m_1 &= Ds^2 + F, \qquad & n_1 &= Es, \\ m_2 &= As^2 + C, \qquad & n_2 &= Bs, \\ \text{and} \quad N(-s^2) &= ADs^4 + (AF + CD - BE)s^2 + CF. \end{aligned} \tag{122}$$

Making use of the minimum condition (42), the last expression can be written in the form

$$N(-s^2) = (\sqrt{AD}\, s + \sqrt{CF}\,)^2. \tag{123}$$

Thus, $N(-s^2)$ is a complete square and the case A applies.

Substituting (122) into (112) we obtain

$$z_{11} = \frac{F}{B}\frac{1}{s} + \frac{D}{B}s\,, \qquad \text{(a)}$$

$$z_{22} = R\,\frac{C}{B}\frac{1}{s} + R\,\frac{A}{B}s\,, \qquad \text{(b)} \qquad (124)$$

$$z_{12} = \sqrt{R}\,\frac{\sqrt{CF}}{B}\frac{1}{s} + \sqrt{R}\,\frac{\sqrt{AD}}{B}s\,. \qquad \text{(c)}$$

It is easy to see from (124) that both the residues at zero and infinity are compact.

From (119) and (120) we obtain

$$Z = \frac{F}{B}\frac{1}{s}\,, \quad n = \sqrt{R}\sqrt{\frac{C}{F}}$$

for the pole at zero and

$$Z = \frac{D}{B}s, \quad n = \sqrt{R}\sqrt{\frac{A}{D}}$$

for the pole at infinity.

The Cauer realization is shown in Figure 34. The presence of perfect transformers makes this network highly undesirable for practical realization. The upper ideal transformer can be however replaced by a perfect transformer according to the equivalence shown in Figure 35. The lower ideal transformer can be completely eliminated if we choose R according to (121). Thus, $R = F/C$. The final network is shown in Figure 36. Being identical with the Brune network derived previously, it suffers, of course, from the same

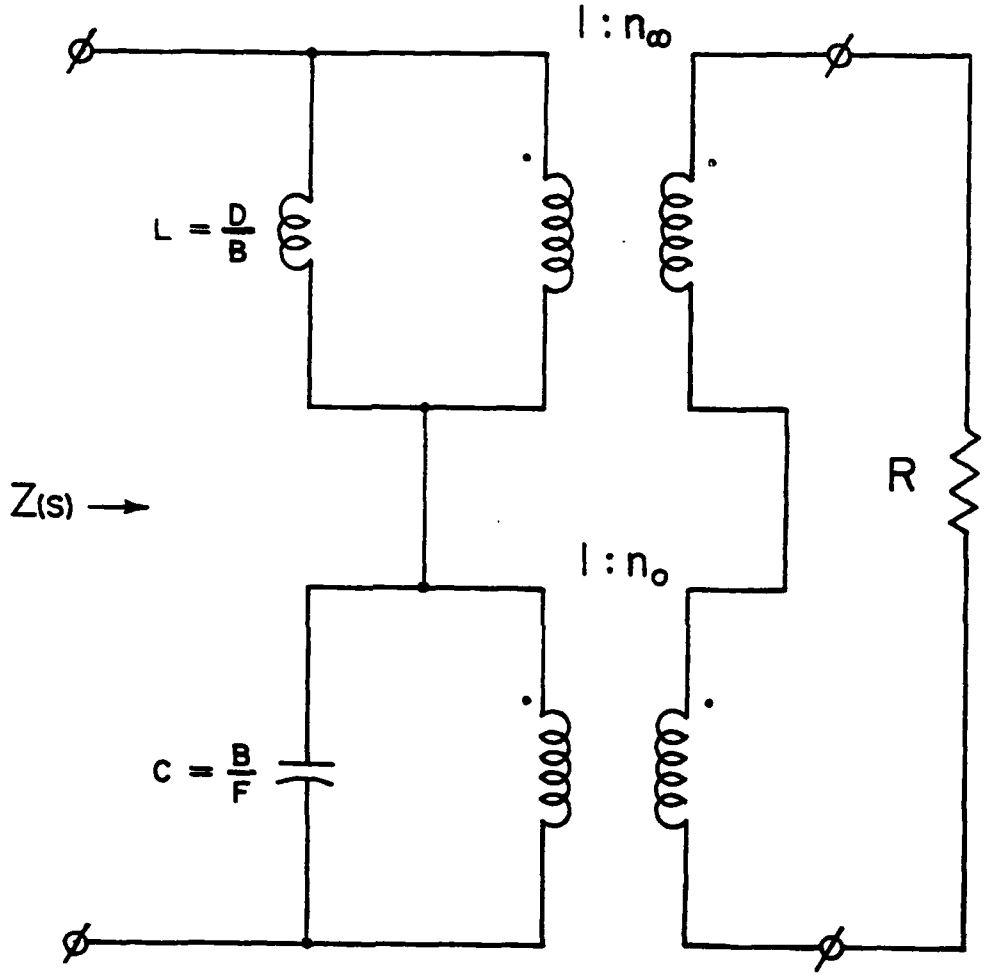

Figure 34. Cauer realization for biquadratic.

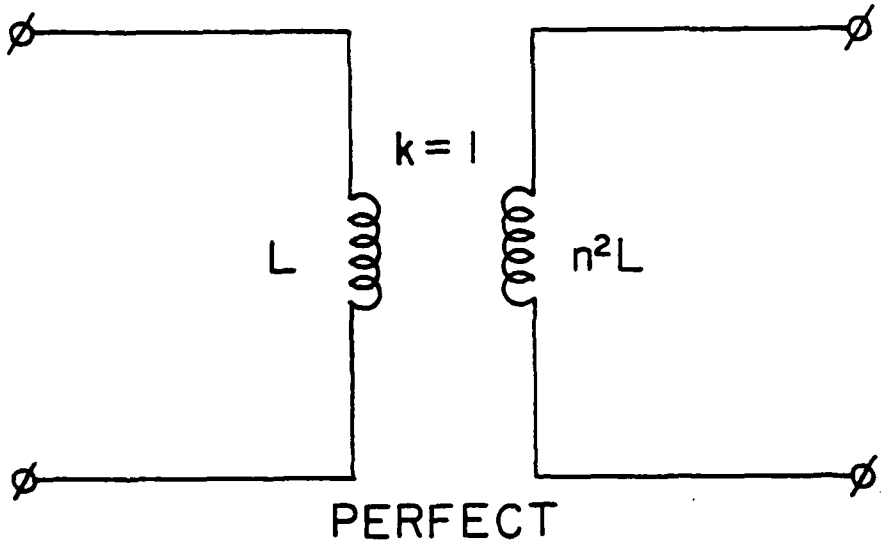

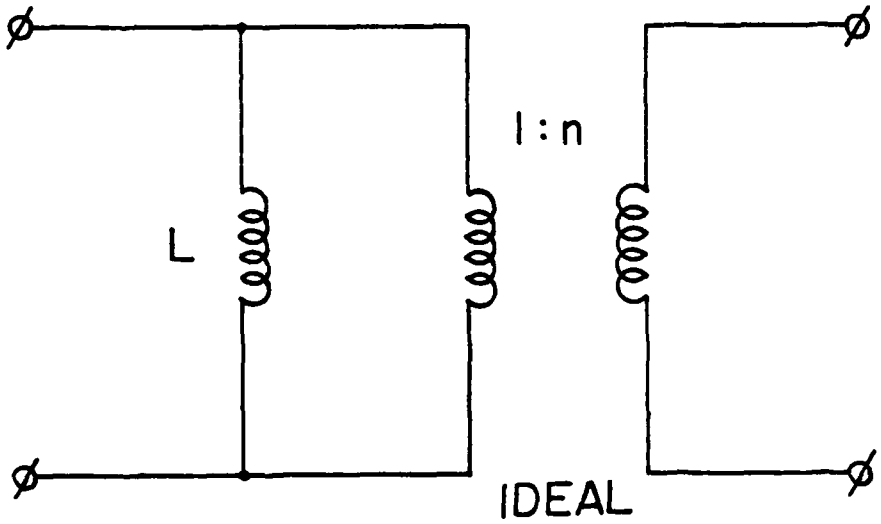

Figure 35. Perfect transformer and its equivalent.

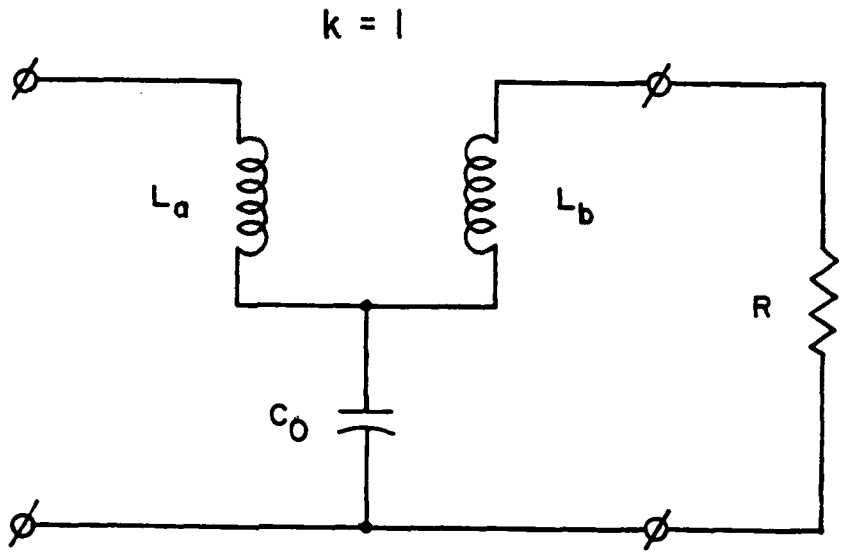

$$L_a = \frac{D}{B} \qquad L_b = \frac{AF}{BC}$$

$$C_0 = \frac{B}{F} \qquad R = \frac{F}{C}$$

Figure 36. Darlington network for biquadratic.

deficiencies.

Hazony [16] described a modification of the above procedure leading to no transformers at the expense of more RLC elements. This approach is discussed below.

Consider the even part of a minimum biquadratic impedance function $\tilde{Z}(s) = 1/\tilde{Y}(s)$

$$Ev\{\tilde{Z}(s)\} = \frac{AD(s^2 + \omega_o^2)^2}{(As^2 + C)^2 - B^2s^2} \tag{125}$$

where either (44a) or (44b) holds and ω_o is given by (43).

By multiplying (125) by the surplus factor $(k^2 - s^2)/(k^2 - s^2)$ it can be decomposed as shown below

$$\begin{aligned} Ev\{\tilde{Z}(s)\} = & \frac{k^2AD(s^2 + \omega_o^2)^2}{[(Ak + B)s^2 + kC]^2 - s^2[As^2 + C + Bk]^2} \\ & + \frac{-s^2AD(s^2 + \omega_o^2)^2}{[(Ak + B)s^2 + kC]^2 - s^2[As^2 + C + Bk]^2} . \end{aligned} \tag{126}$$

or

$$Ev\{\tilde{Z}(s)\} = Ev\{\tilde{Z}_1(s)\} + Ev\{\tilde{Z}_2(s)\} = \frac{m_o^2}{m_2^2 - n_2^2} + \frac{-n_o^2}{m_2^2 - n_2^2} , \tag{127}$$

where $\tilde{Z}_1(s)$ and $\tilde{Z}_2(s)$ can be synthesized by Darlington's procedure. The positive constant k can be chosen so that no transformers result.

Consider $\tilde{Z}_1(s)$ first. From (112) we have

$$\frac{z_{22}}{R_2} = \frac{m_2}{n_2} = \frac{(Ak + B)s^2 + kC}{s(As^2 + Bs + C)} , \tag{128}$$

$$\frac{z_{12}}{\sqrt{R_2}} = \frac{m_o}{n_2} = \frac{k\sqrt{AD}(s^2 + \omega_o^2)}{s(As^2 + C + Bk)} . \tag{129}$$

There are two distinct cases which will lead to no transformers: (1) the zero of z_{12} will cancel its pole or (2) z_{22} has same zeros and poles as z_{12}.

For the first case we have

$$\frac{C + Bk}{A} = \omega_o^{\ 2} ,$$

or

$$k = \frac{\sqrt{AF} - \sqrt{CD}}{B} \sqrt{\frac{C}{D}} ,$$

which is positive only when (44a) holds (case A). Thus,

$$k = \sqrt{\frac{CE}{BD}} . \tag{130}$$

In the second case above we have

$$\frac{kC}{Ak + B} = \omega_o^{\ 2} , \tag{131}$$

or

$$k = \frac{B}{\sqrt{CD} - \sqrt{AF}} \sqrt{\frac{F}{A}} ,$$

which is positive only when (44b) holds (case B). Thus,

$$k = \sqrt{\frac{BF}{AE}} . \tag{132}$$

In both cases the remaining impedance z_{11} can be found from the residue condition (the residues must be compact).

Consider the case A first. Substituting (130) for k in (128) and (129) we obtain (after partial fraction expansion)

$$\frac{z_{22}}{R_2} = \frac{\frac{C}{F}\sqrt{\frac{EF}{AB}}}{s} + \frac{s\,\frac{M}{A\sqrt{DF}}}{s^2 + \omega_o^{\ 2}} \tag{133}$$

$$\frac{z_{12}}{\sqrt{R_2}} = \frac{\sqrt{\frac{CE}{AB}}}{s} \tag{134}$$

and, from the residue condition,

$$z_{11} = \frac{\sqrt{\frac{EF}{AB}}}{s} \tag{135}$$

with

$$M = B\sqrt{DF} + E\sqrt{AC} \ .$$

This set of parameters can be now easily realized by the Cauer method described previously. For the pole at zero we eliminate the ideal transformer by choosing the value of R_2 as prescribed by (121). Thus, $R_2 = F/C$. The pole at $\pm j\omega_o$ is a private pole [47] of z_{22} and can be simply realized as a parallel LC network connected in series with the output. The resulting network is shown in Figure 37.

Consider the case B next. From (128), (129), and (132) we obtain

$$\frac{z_{22}}{R_2} = \frac{\frac{C\sqrt{BF}}{R}}{s} + \frac{s\,\frac{MB}{RA}\sqrt{\frac{C}{E}}}{s^2 + \frac{R}{A\sqrt{AE}}} \ , \tag{136}$$

and

$$\frac{z_{12}}{\sqrt{R_2}} = \frac{\frac{F\sqrt{BC}}{R}}{s} + \frac{s\,\frac{MB}{RA}\sqrt{\frac{F}{E}}}{s^2 + \frac{R}{A\sqrt{AE}}} \ , \tag{137}$$

with

$$R = C\sqrt{AE} + B\sqrt{BF}.$$

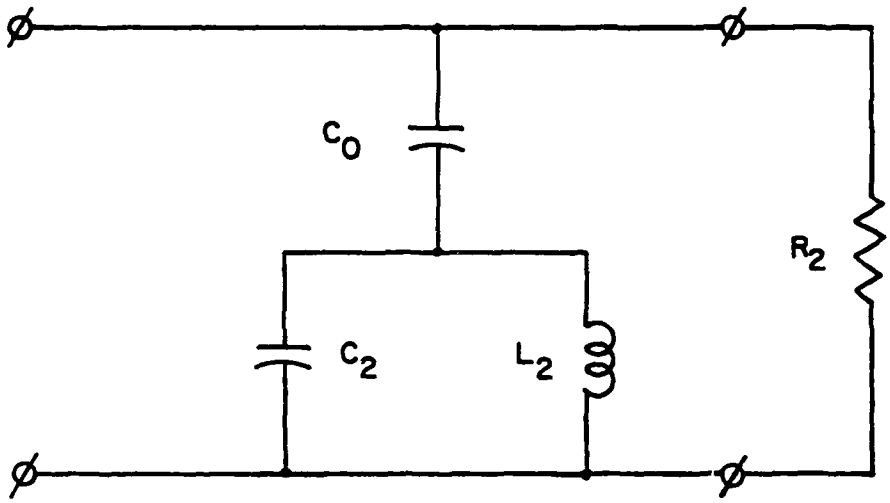

$$C_0 = \frac{R}{F\sqrt{BF}} \qquad R_2 = \frac{F}{C}$$

$$C_2 = \frac{RA\sqrt{CE}}{MBF} \qquad L_2 = \frac{MBF}{R^2}\sqrt{\frac{A}{C}}$$

$$R = C\sqrt{AE} + B\sqrt{BF} \qquad M = B\sqrt{DF} + E\sqrt{AC}$$

Figure 37. Darlington procedure: realization of $Z_1(s)$ - Case A.

From the residue condition we get

$$z_{11} = \frac{\frac{F\sqrt{BF}}{R}}{s} + \frac{s\,\frac{MBF}{RA\sqrt{CE}}}{s^2 + \frac{R}{A\sqrt{AE}}} \quad . \tag{138}$$

The choice $R_2 = F/C$ leads to a transformerless realization shown in Figure 38. This network is equivalent to network shown in Figure 39.

For the impedance $\tilde{Z}_2(s)$, from (126), (127), and (112), we have

$$\frac{z_{22}}{R_1} = \frac{n_2}{m_2} = \frac{s(As^2 + C + Bk)}{(Ak + B)s^2 + kC} \; , \tag{139}$$

and

$$\frac{z_{12}}{\sqrt{R_1}} = \frac{n_o}{m_2} = \frac{s\sqrt{AD}(s^2 + \omega_o^{\,2})}{(Ak + B)s^2 + kC} \; . \tag{140}$$

Again, two cases are possible. For the case A we get

$$\frac{z_{22}}{R_1} = s\,\frac{A\sqrt{BD}}{Q} + \frac{s\,\frac{MB}{Q^2\sqrt{AC}}}{s^2 + \frac{C\sqrt{CE}}{Q}} \; , \tag{141}$$

$$\frac{z_{12}}{\sqrt{R_1}} = s\,\frac{D\sqrt{AB}}{Q} + \frac{s\,\frac{MB}{Q^2\sqrt{CD}}}{s^2 + \frac{C\sqrt{CE}}{Q}} \; , \tag{142}$$

and

$$z_{11} = s\,\frac{D\sqrt{BD}}{Q} + \frac{s\,\frac{MBD}{Q^2}\sqrt{\frac{C}{A}}}{s^2 + \frac{C\sqrt{CE}}{Q}} \; , \tag{143}$$

where

$$Q = A\sqrt{CE} + B\sqrt{BD} \; .$$

The choice $R_1 = D/A$ leads to a transformerless realization shown in Figure 40.

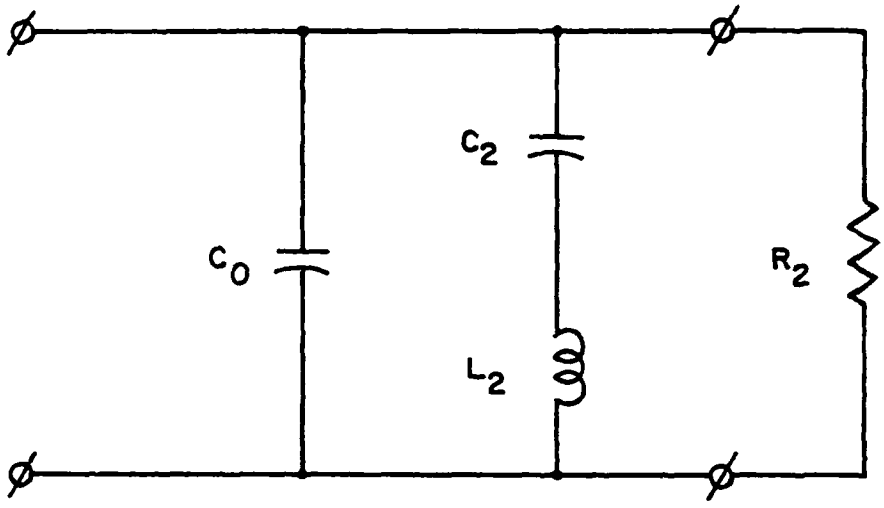

$$C_2 = \frac{M}{F\sqrt{DF}} \qquad R_2 = \frac{F}{C}$$

$$C_0 = \frac{A}{F}\sqrt{\frac{CE}{BD}} \qquad L_2 = \frac{DF}{M}\sqrt{\frac{A}{C}}$$

Figure 38. Darlington procedure: realization of $Z_1(s)$ - Case B.

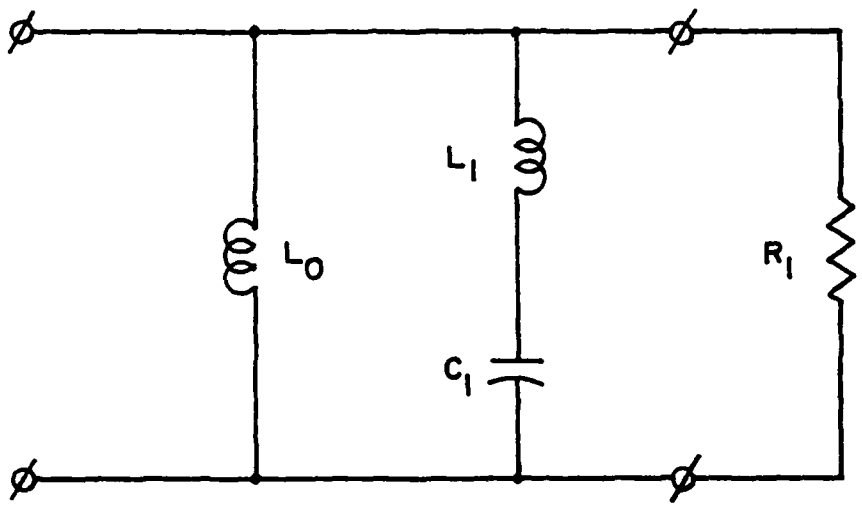

$$L_1 = \frac{D\sqrt{DF}}{M} \qquad R_1 = \frac{D}{A}$$

$$L_0 = \frac{D}{C}\sqrt{\frac{BF}{AE}} \qquad C_1 = \frac{M}{DF}\sqrt{\frac{A}{C}}$$

Figure 39. Darlington procedure: network equivalent to network given in Figure 38.

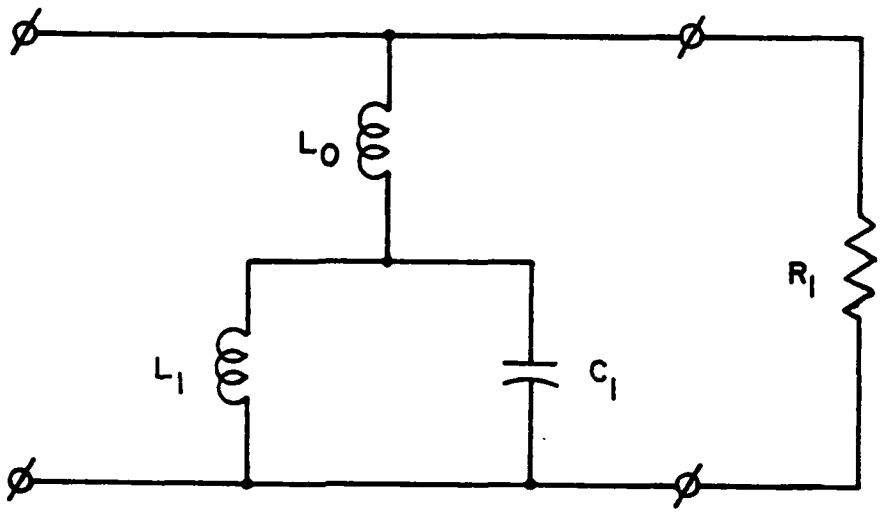

$$L_0 = \frac{D\sqrt{BD}}{Q} \qquad R_1 = \frac{D}{A}$$

$$L_1 = \frac{MBD}{QC\sqrt{AE}} \qquad C_1 = \frac{Q^2}{MBD}\sqrt{\frac{A}{C}}$$

Figure 40. Darlington procedure: realization of $Z_2(s)$ - Case A.

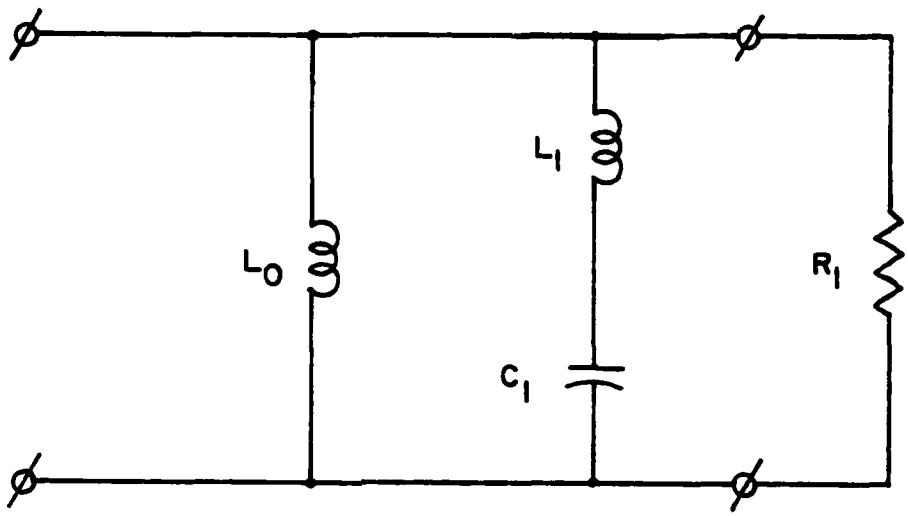

$$L_1 = \frac{D\sqrt{DF}}{M} \qquad R_1 = \frac{D}{A}$$

$$L_0 = \frac{D}{C}\sqrt{\frac{BF}{AE}} \qquad C_1 = \frac{M}{DF}\sqrt{\frac{A}{C}}$$

Figure 41. Darlington procedure: network equivalent to network shown in Figure 40.

This network is equivalent to the network shown in Figure 41.

For the case B we get

$$\frac{z_{22}}{R_1} = s\,\frac{A}{B}\sqrt{\frac{BE}{CD}} + \frac{s\,\dfrac{M}{D\sqrt{AC}}}{s^2 + \omega_o^2}\,, \tag{144}$$

$$\frac{z_{12}}{\sqrt{R_1}} = s\,\sqrt{\frac{AE}{BC}}\,, \tag{145}$$

and

$$z_{11} = s\sqrt{\frac{DE}{BC}}\,. \tag{146}$$

With $R_1 = D/A$ this set of parameters has the realization shown in Figure 42.

If we now connect in series the networks for $\tilde{Z}_1$ and $\tilde{Z}_2$ for the cases A and B, the networks in Figure 43 result.

It can be shown by using the equivalent networks from Figures 38 and 41, that the networks obtained are the Bott-Duffin networks (Figures 21, 22) except that the detector arms are short-circuited.

4.4 MIYATA PROCEDURE

In this method the even part of the given function $\tilde{Z}(s)$ is decomposed as follows

$$Ev\{\tilde{Z}(s)\} = \frac{N(-s^2)}{m_2^2 - n_2^2} = \frac{\sum_p a_p(-s^2)^p}{m_2^2 - n_2^2}$$

$$= \frac{a_o}{m_2^2 - n_2^2} + \frac{a_1(-s^2)}{m_2^2 - n_2^2} + \ldots + \frac{a_n(-s^2)^n}{m_2^2 - n_2^2}$$

$$= Ev\{\tilde{Z}_o\} + Ev\{\tilde{Z}_1\} + \ldots + Ev\{\tilde{Z}_n\}\,. \tag{147}$$

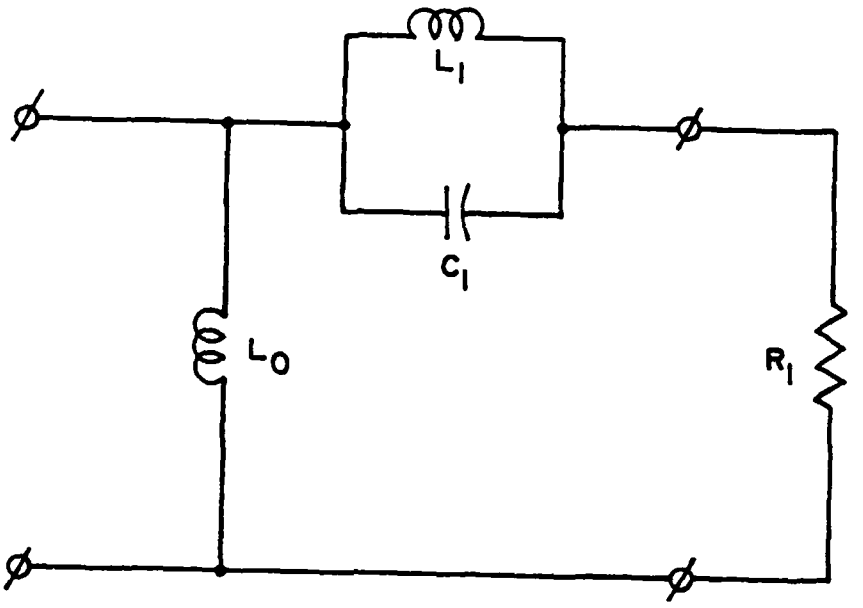

$$L_1 = \frac{M}{AC}\sqrt{\frac{D}{F}} \qquad C_1 = \frac{A\sqrt{AC}}{M}$$

$$L_0 = \sqrt{\frac{DE}{BC}} \qquad R_1 = \frac{D}{A}$$

Figure 42. Darlington procedure: realization of $Z_2(s)$ - Case B.

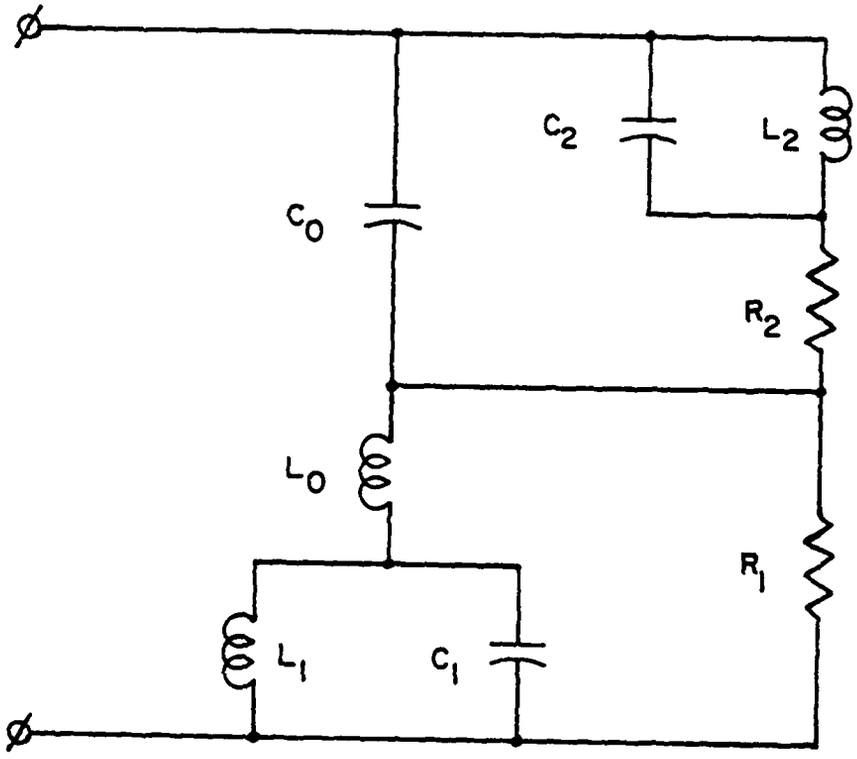

$$C_0 = \sqrt{\frac{AB}{EF}} \qquad C_2 = \frac{AC}{M}\sqrt{\frac{D}{F}}$$

$$L_2 = \frac{M}{AC}\sqrt{\frac{A}{C}} \qquad R_2 = \frac{F}{C}$$

$$L_0 = \frac{D\sqrt{BD}}{Q} \qquad R_1 = \frac{D}{A}$$

$$L_1 = \frac{MBD}{CQ\sqrt{AE}} \qquad C_1 = \frac{Q^2}{MBD}\sqrt{\frac{A}{C}}$$

$$Q = A\sqrt{CE} + B\sqrt{BD} \qquad \sqrt{AF} - \sqrt{CD} = \sqrt{BE}$$

(a)

Figure 43. Final form of Darlington networks for Cases A(a), and B(b).

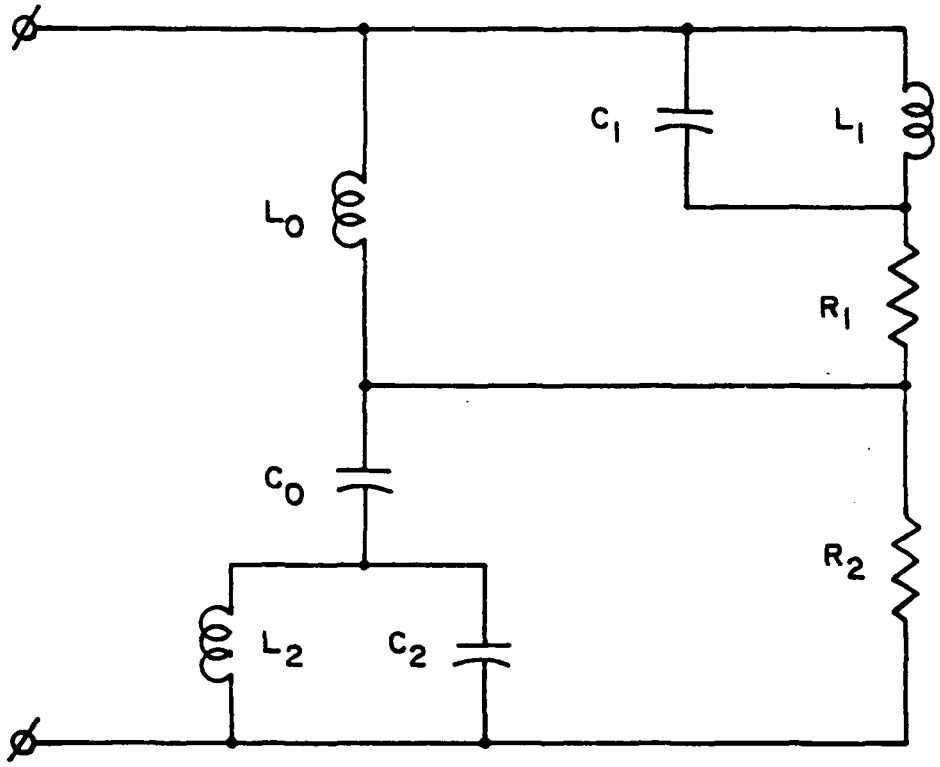

$$C_1 = \frac{A\sqrt{AC}}{M} \qquad L_1 = \frac{M}{AC}\sqrt{\frac{D}{F}}$$

$$L_0 = \sqrt{\frac{DE}{BC}} \qquad R_1 = \frac{D}{A}$$

$$C_0 = \frac{R}{F\sqrt{BF}} \qquad R_2 = \frac{F}{C}$$

$$L_2 = \frac{MBF}{R^2}\sqrt{\frac{A}{C}} \qquad C_2 = \frac{RA\sqrt{CE}}{MBF}$$

$$R = C\sqrt{AE} + B\sqrt{BF} \qquad \sqrt{AF} - \sqrt{CD} = -\sqrt{BE}$$

(b)

Figure 43 (Continued).

If the coefficients a_i are positive, each of the even parts in (147) will correspond to an impedance which can be realized as a network containing n reactive elements plus a resistance.

Even if some of the coefficients a_i in the original function are negative they can be made positive by multiplying the numerator and the denominator of $\tilde{Z}(s)$ by suitable surplus factors [1]. This procedure fails however if $N(-s^2)$ contains factors of the form $(s^2 + \omega_o^2)^2$. A look at eq. (125) reveals that our function falls into this very class. Thus, the Miyata procedure is not applicable to minimum functions.

AD-A088 923 KENTUCKY UNIV LEXINGTON DEPT OF ELECTRICAL ENGINEERING F/G 9/3
SYNTHESIS METHODS APPLICABLE TO SEM POLE-PAIR ADMITTANCES.(U)
DEC 79 K A MICHALSKI, L W PEARSON
UNCLASSIFIED RR-79-5 NL

2 OF 2
AD A
088923

END
DATE
FILMED
10-80
DTIC

Section V

PRACTICAL MATTERS

5.1 CAPACITIVE ADJUSTMENT

It is of interest to point out that all the SEM derived equivalent networks given in Section IV fail to reproduce the early time response of the structure, as computed by TWTD program. It was suggested by Streable et. al. [40] that this departure of results is attributable to the quasistatic influence of the reactance which one neglects when the summation (1) is truncated to a finite number of elements for realization. This asymptotic reactance of a given structure must be computed apart from the SEM representation and the reactance of the truncated equivalent circuit must be adjusted with additional element(s) so as to match that of the object in the asymptotic limit.

As an example the static capacitance of the simplified Bott-Duffin network for a dipole antenna (Figure 30) was adjusted by adding a 70 pF capacitance C_a in shunt. A remarkable improvement in the early time response of the network was observed (Figure 44). This particular value of C_a was found by a cut and try method but systematic means of finding it are conceivable. For example, C_a could be determined as a difference between the static capacitance of the structure determined by some auxiliary means - for example, a method of moments solution for the static capacitance - and the static capacitance of the equivalent network synthesized from the SEM data. Unfortunately, it is believed that this method cannot be employed in the case of approximate, resistively padded networks.

5.2 PARASITIC EFFECTS

All networks considered thus far comprise only ideal RLC elements.

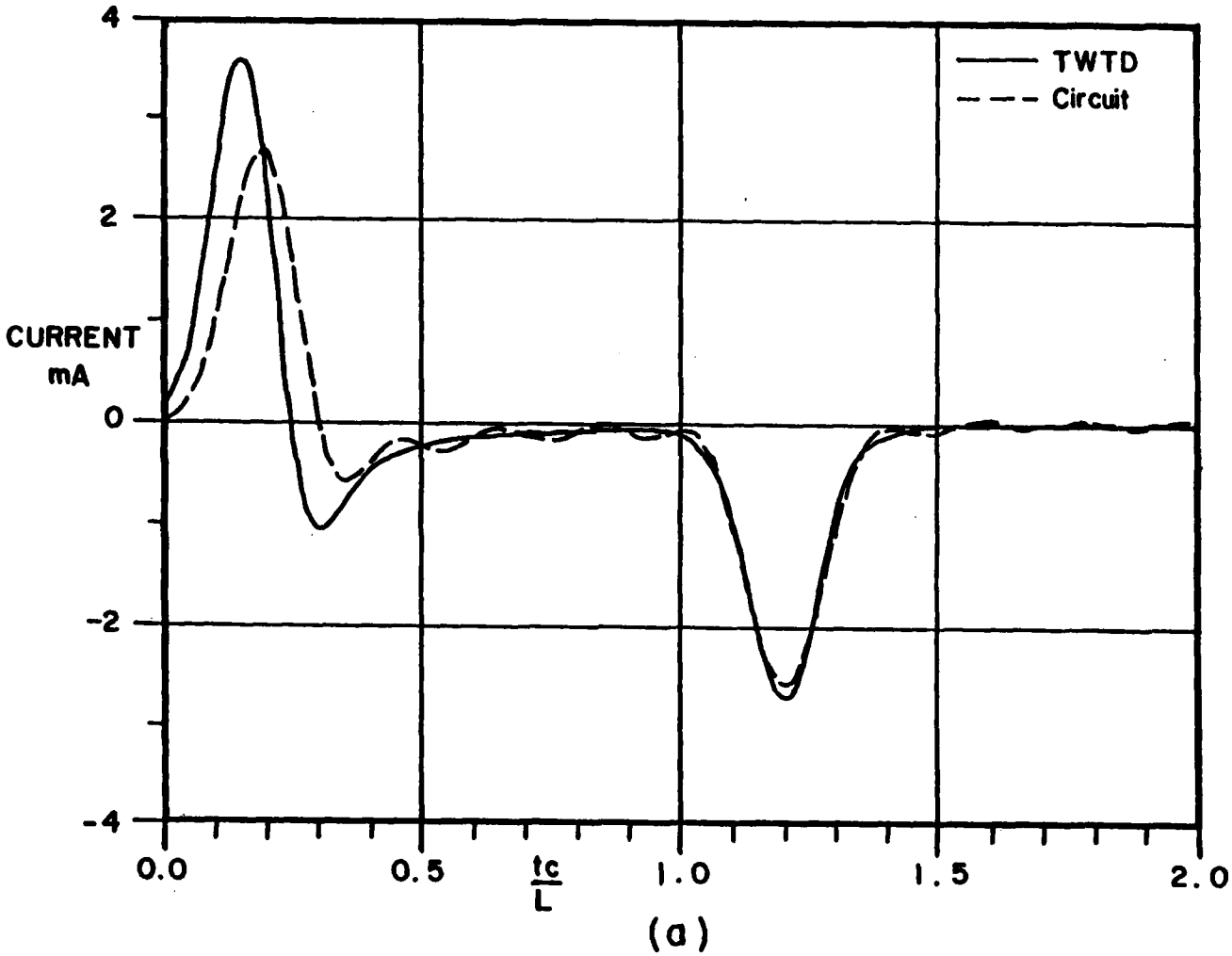

Figure 44. Early time response of the equivalent network for the dipole antenna (Figure 30). (a) Without correction, and (b) with 70pF shunt capacitor.

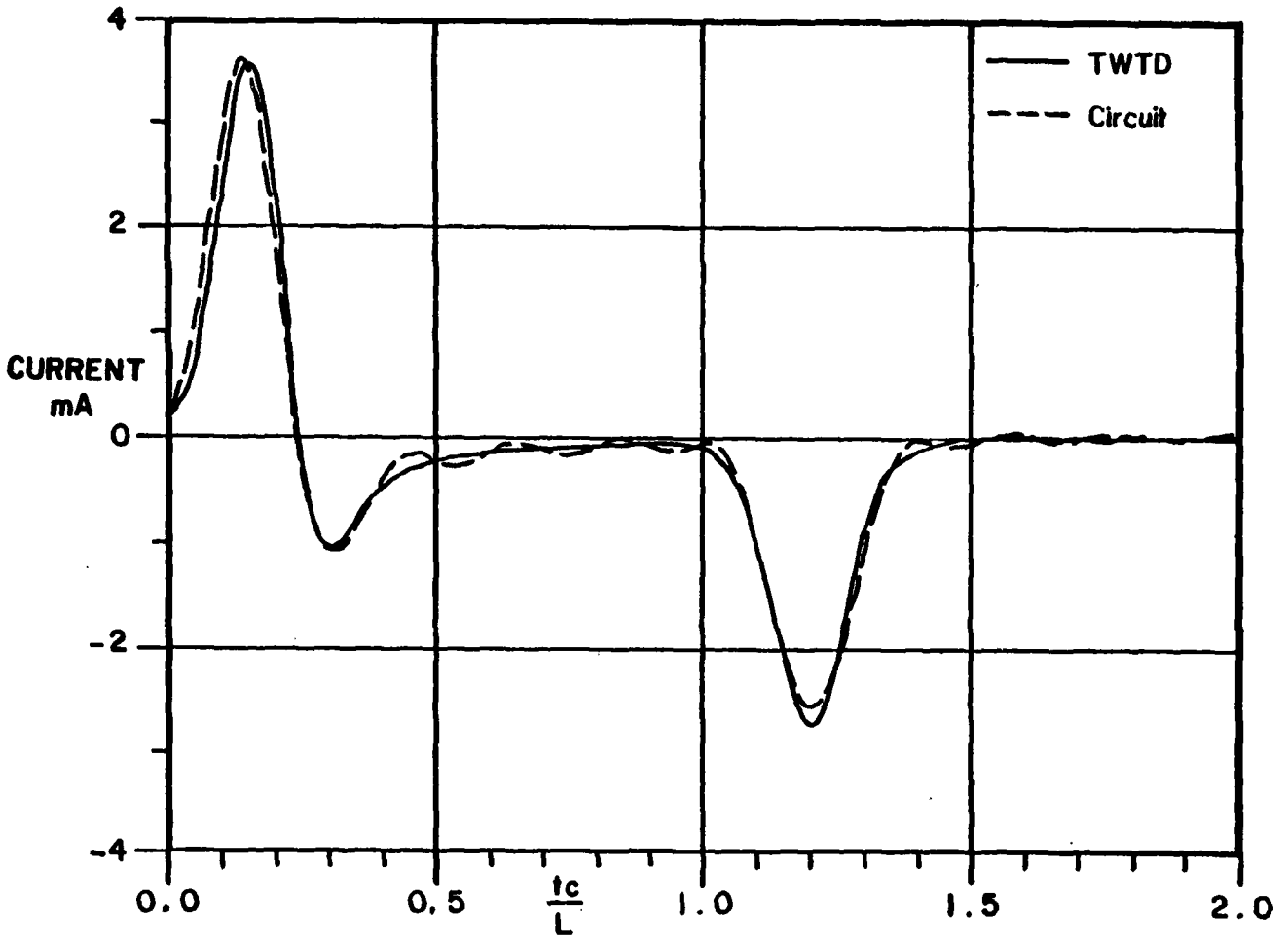

(b)

Figure 44 (Continued).

However, in the practical realization each element introduces some parasitic elements which have deteriorating influence on the network performance. Therefore the impact of the parasitic effects should be carefully considered, particularly if the network has to operate at high frequencies.

As a rule, the inductors are the most troublesome elements. The quality of resistors and capacitors is usually much higher and they can be often treated as ideal, particularly at moderate frequencies.

A useful equivalent network for an inductor is shown in Figure 45 [44]. This three-element network offers a fairly accurate description of most coils at frequencies where they are designed to operate.

As an example, we considered the effect of the parasitic elements introduced by inductors on the performance of the equivalent network for the dipole antenna (Figure 30). The quality factor $Q = 200$ at frequency $\omega = 10*10^6$ rad/sec was assumed for all coils and the computations were done for $C = 1pF$ and $C = 2pF$.

The network responses for these cases are compared with the response of the original network in Figures 46 and 47. It is evident that the parasitic effects have very deteriorating impact on the network performance. As can be seen from these figures the response of the network is very sensitive to the change of the parasitic capacitance. Thus, whenever possible, configurations should be chosen in which capacitors appear in parallel with inductors. For then the parasitic effect can be cancelled by reducing the size of the capacitor. The parasitic capacitance then makes up for the reduction.

5.3 NETWORK SENSITIVITY

Another factor limiting the practicality of the realization is the sensitivity of the network response to changes in element values. Thus, it is

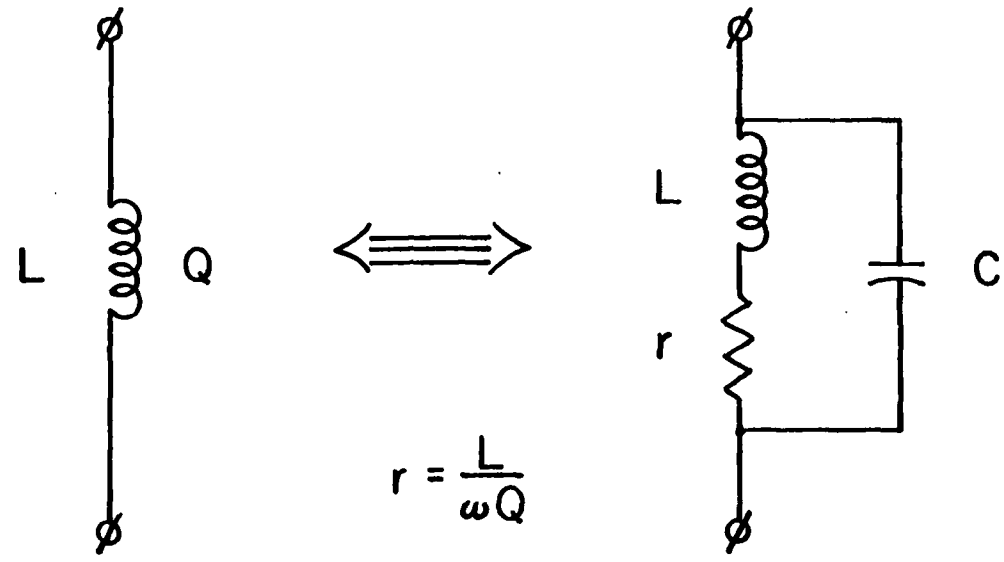

Figure 45. Equivalent network for a real inductor.

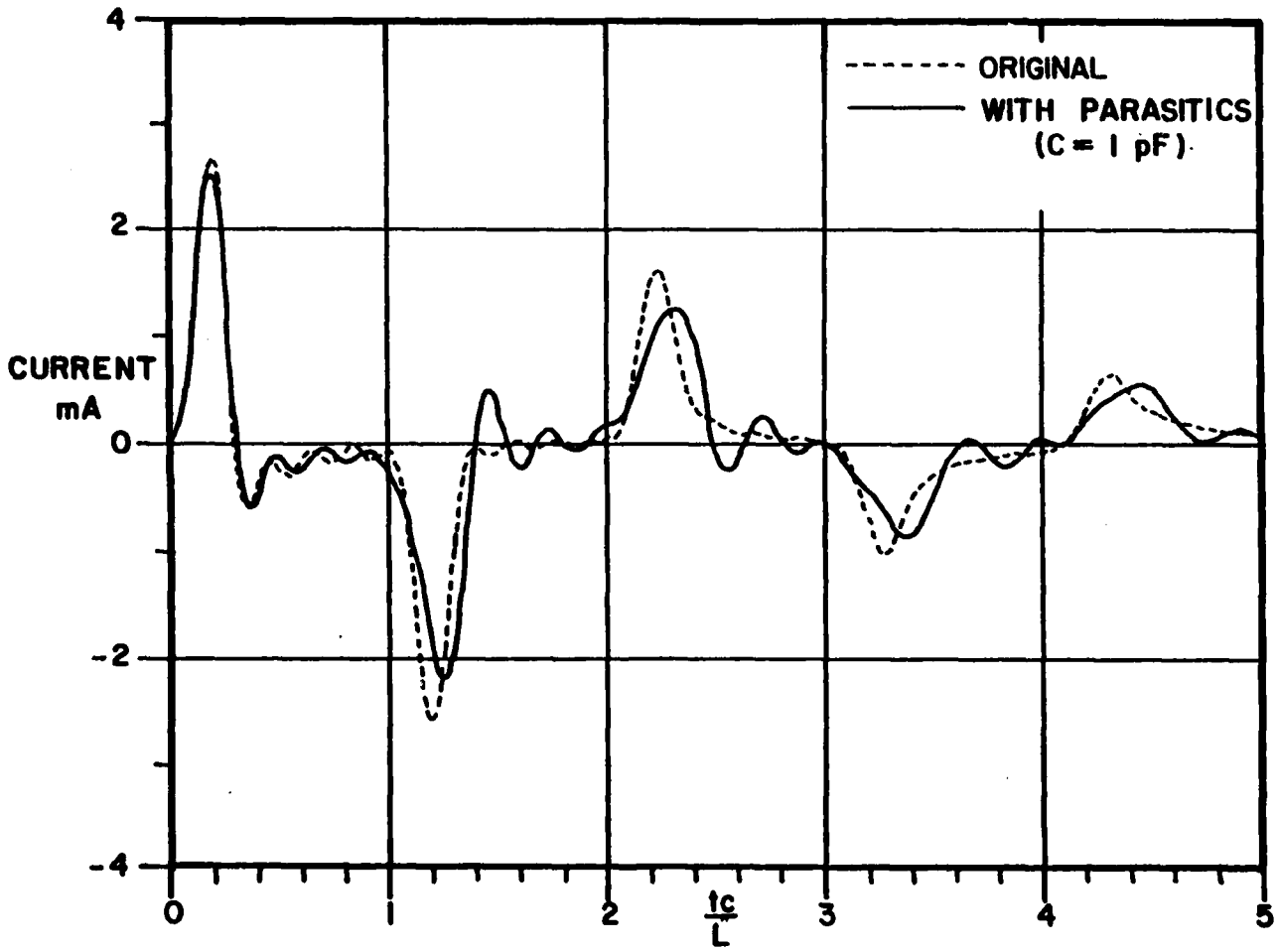

Figure 46. The influence of the parasitic effects: C = 1pF.

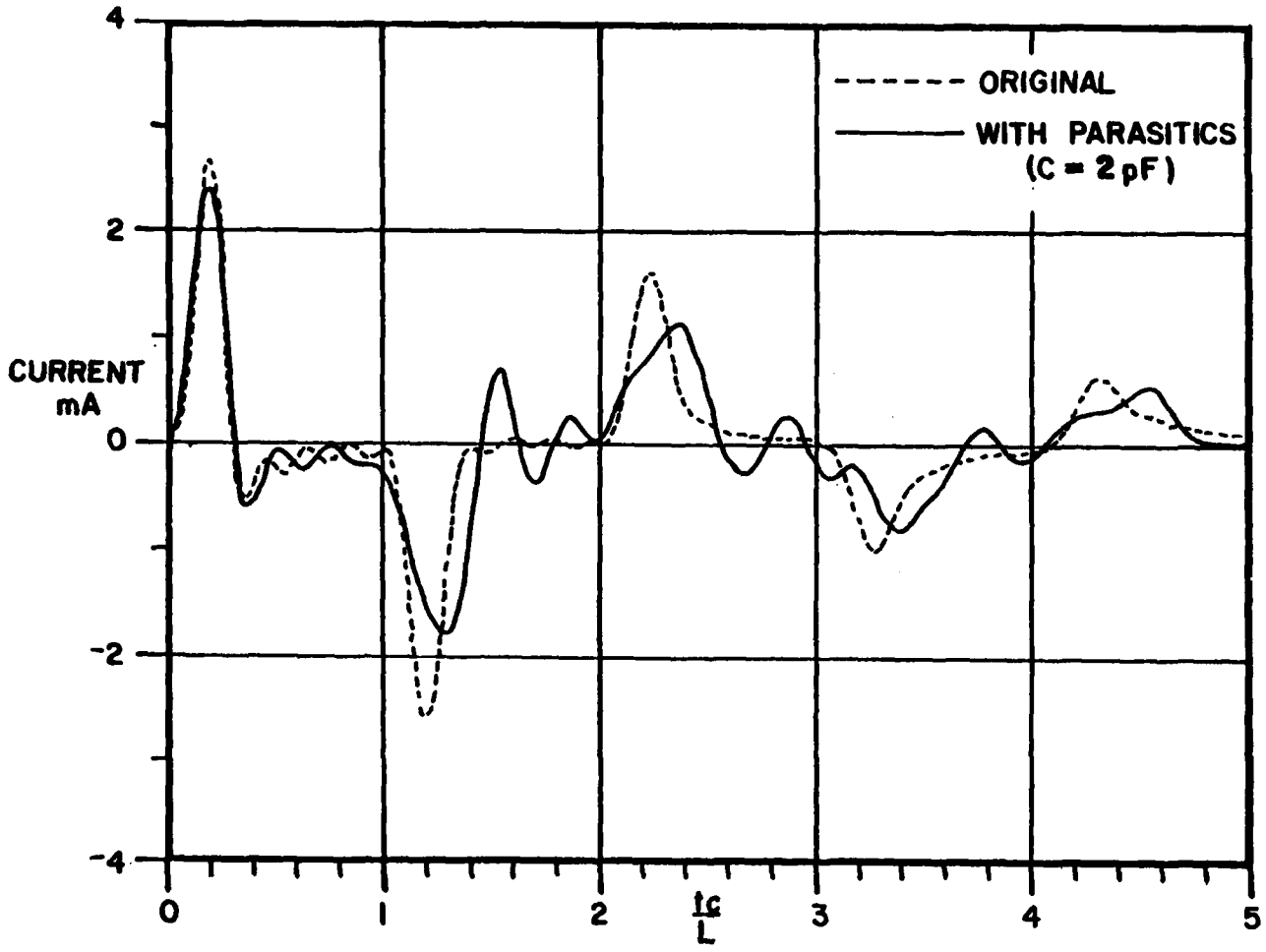

Figure 47. The influence of the parasitic effects: C = 2pF.

important to choose, from all the networks available, the one which exhibits the least sensitivity.

It was shown in Section IV that the only transformerless synthesis procedure available for minimum biquadratic functions is the Bott-Duffin method. Unfortunately, the Bott-Duffin network is very sensitive to component errors. The mechanism behind this sensitivity is as follows [47].

The admittance of the Bott-Duffin network (Figure 21) should generally be of order six. Thus, in order to represent a second order function, a cancellation of some poles and zeros must occur - the network is a balanced bridge. If the element's values are changed in some random fashion, then all zeros and poles migrate and the bridge balance is destroyed producing a significant change in the character of the function.

As shown in Section IV, it is the minimum PR character of the approximate pole-pair admittances that restricts the applicable synthesis techniques. Thus, it is conceivable, that by excessive resistive padding, but still within the limits of acceptable approximation, other, less sensitive realization could be obtained (by Miyata procedure, partial fraction expansion, etc.).

Finally, it should be noted that the equivalent networks of high-Q structures (like thin wire dipole and loop antennas) are intrinsically very sensitive to changes in element values, no matter what the form of their realization. This is so because the poles of the sensitivity function coincide with the poles of the immittance function.

Section VI

CONCLUSIONS

The first layer conjugate pole-pair modules for the dipole and loop wire antennas are, in general, not PR. However, they can be made PR by negligible resistive padding. It is conjectured that this is true for most high-Q structures.

The padded pole-pair module is a minimum-real-part biquadratic function. If the zero of the real part of this function occurs at zero or infinity, it can be easily realized by continuous fraction expansion (Section III). If however the zero of the real part occurs at some finite frequency (the function is Class III, in terminology of Section III) then, as shown in Section IV, the Bott-Duffin network constitutes the exclusive transformerless form derivable.

It is shown that for structures which qualify for this type of analysis the Bott-Duffin network can be simplified to a simple four-element network. This network has been shown to give very favorable results for straight-wire and wire-loop antennas.

Explicit forms of this and other networks are derived in Sections III and IV.

It is shown in Section V that the early time response of the dipole antenna can be significantly improved by capacitive adjustment. The value of the capacitor added must be, however, computed apart from the SEM representation.

As was demonstrated in Section V, the parasitic elements associated with the real RLC elements can have a very deteriorating influence on the

network performance. Therefore, if one attempts practical realization of the network, this issue should be carefully considered in the design.

The sensitivity of the network response to changes in element values is another factor which limits the practicability of the derived networks. Thus, whenever possible, the least sensitive network should be chosen for realization.

Finally, the equivalent networks of high-Q structures are intrinsically very sensitive. It is this kind of sensitivity which dominates in the case of thin-wire structures.

Section VII

APPENDIX

Below the listing of a FORTRAN program for the conjugate pole-pair synthesis of an admittance function implementing the results of Section III and Section IV is included.

The program works in conversational mode. The input consists of the poles, the residues, and the normalization constant (identical for poles and residues). The program computes the coefficients of the biquadratic (6), the minimum real part frequency, the necessary padding (with respect to unmodified pole-pair module) and prints out the element values (normalized and absolute) for several different network configurations. The element names refer to relevant figures of Sections III and IV.

A sample run is included following the listing of the program.

```
      DIMENSION ALFA(10),BETA(10),SIGMA(10),OMEGA(10)
      COMMON FAC
987   CALL INPUT(N,SIGMA,OMEGA,ALFA,BETA,FAC,SCALE)
      DO 1 I=1,N
      A=0.
      B=2.*ALFA(I)
      C=2.*(ALFA(I)*SIGMA(I)-BETA(I)*OMEGA(I))
      D=1.
      E=2.*SIGMA(I)
      F=SIGMA(I)**2+OMEGA(I)**2
      WRITE(5,97)I
97    FORMAT(///10X'****** POLE PAIR NO.'I3' ******'//)
      WRITE(5,204)
204   FORMAT(/'   THE COEFFICIENTS BEFORE PADDING')
      WRITE(5,110)A,B,C,D,E,F
110   FORMAT(/' A ='E11.4' B ='E11.4' C ='E11.4/
     1 ' D ='E11.4' E ='E11.4' F ='E11.4/)
      CALL FIND(A,B,C,D,E,F,W1,G1,IND)
      R1=0.
      IF(G1.NE.0.)R1=-1./G1
      WRITE(5,205)W1,R1
205   FORMAT(/'   THE MINIMUM REAL PART OCCURS AT THE
     1 (NORMALIZED) '/'            FREQUENCY ='E13.6/
     1 '   THE NECESSARY PADDING IS ='E13.6'   OHMS'/)
      WRITE(5,125)
125   FORMAT(/' NEW COEFFICIENTS (AFTER PADDING)')
      WRITE(5,110)A,B,C,D,E,F
      IF(IND.EQ.0)GOTO 51
      IF(IND.EQ.-1)CALL TRY1(A,B,C,D,E,F)
      IF(IND.EQ.1)CALL TRY2(A,B,C,D,E,F)
      GOTO 1
51    CALL BRUNE(A,B,C,D,E,F)
      CALL HELP(A,B,C,D,E,F,KQ)
      IF(KQ.EQ.0)CALL ABOTT(A,B,C,D,E,F)
      IF(KQ.EQ.1)CALL BBOTT(A,B,C,D,E,F)
1     CONTINUE
      WRITE(5,185)
185   FORMAT(///'   ENTER 1 FOR NEXT PROBLEM
     1 OR ZERO TO STOP'/)
      READ(5,*)KY
      IF(KY.EQ.1)GOTO 987
      STOP
      END
C
      SUBROUTINE FIND(A,B,C,D,E,F,W0,G0,IND)
      LOGICAL BUG
      V(X)=(W-X*U)/(2.*D*(A-X*D))
      BUG=.FALSE.
      Z0=C/F
      Z1=A/D
      IF(BUG)WRITE(5,11)Z0,Z1
11    FORMAT(' Z0 ='E13.5' Z1 ='E13.5)
      Z=AMIN1(Z0,Z1)
```

```
      IND=-1
      W1=0.
      IF(Z0.LE.Z1)GOTO 5
      IND=1
      W1=1.E38
5     W=A*F+C*D-B*E
      U=2.*D*F-E*E
      A1=U*U-4.*(D*F)**2
      B1=4.*A*D*F**2+4.*C*D**2*F-2.*U*W
      C1=W**2-4.*A*C*D*F
      DEL=B1*B1-4.*A1*C1
      IF(DEL.LT.0.)STOP' FIND: DELTA.LT.0 ?'
      SQ=SQRT(DEL)
      X1=(-B1-SQ)/2./A1
      X2=(-B1+SQ)/2./A1
      O1=V(X1)
      O2=V(X2)
      IF(BUG)WRITE(5,10)X1,X2,O1,O2
10    FORMAT(/' X1 ='E13.5' X2 ='E13.5/' O1 ='E13.5' O2 ='E13.5)
      IF(O1.LT.0..AND.O2.LT.0.)GOTO 7
      IF(O1.LT.0.)X1=1.E38
      IF(O2.LT.0.)X2=1.E38
      IF(X1.LT.X2)GOTO 3
      G0=X2
      W0=SQRT(O2)
      GOTO 2
3     G0=X1
      W0=SQRT(O1)
2     IF(G0.GE.Z)GOTO 7
      IND=0
1     A=A-G0*D
      B=B-G0*E
      C=C-G0*F
      RETURN
7     G0=Z
      W0=W1
      GOTO 1
      END
C
      SUBROUTINE HELP(A,B,C,D,E,F,KQ)
      KQ=0
      AF=A*F
      Q1=SQRT(AF)
      CD=C*D
      Q2=SQRT(CD)
      BE=B*E
      Q3=SQRT(BE)
      Q4=Q1-Q2
      QQ=Q4**2-BE
      IF(ABS(QQ).GT.1.E-4)STOP' HELP: NOT A MINIMUM FUNCTION'
      IF(Q4.LT.0.)KQ=1
      RETURN
      END
C
```

```
      SUBROUTINE ABOTT(A,B,C,D,E,F)
      REAL M,L,L1,LN1,L2,LN2,LN
      COMMON FAC
      M=B*SQRT(D*F)+E*SQRT(A*C)
      CX=SQRT(A*B/E/F)
      L1=D/M*SQRT(D*F)
      C1=M/D/F*SQRT(A/C)
      R1=D/A
      L2=M/A/C*SQRT(A/C)
      R2=F/C
      C2=A*C/M*SQRT(D/F)
      L=D/C*SQRT(B*F/A/E)
      CN=CX/FAC
      LN1=L1/FAC
      CN1=C1/FAC
      LN2=L2/FAC
      CN2=C2/FAC
      LN=L/FAC
      WRITE(5,131)
131   FORMAT(/' BOTT-DUFFIN-CASE(A)-UNMODIFIED'/)
      WRITE(5,132)
132   FORMAT(7X'NORMALIZED'6X'FINAL')
      WRITE(5,100)CX,CN,L1,LN1,C1,CN1,R1,R1,R2,R2,
     1 L2,LN2,C2,CN2,L,LN
100   FORMAT(
     1 ' C0 ='2E13.5/' L1 ='2E13.5/' C1 ='2E13.5/' R1 ='2E13.5//
     2 ' R2 ='2E13.5/' L2 ='2E13.5/' C2 ='2E13.5/' L0 ='2E13.5/)
      R=F*SQRT(B*D)+E*SQRT(C*E)
      CX=SQRT(A*B/E/F)
      L1=R*D/M**2*SQRT(B*D)
      C1=M**2/R/C/D*SQRT(A*C/B/F)
      R1=D/A
      C2=A*C/R*SQRT(D*E/A/F)
      R2=F/C
      L=R/C/SQRT(C*E)
      CN=CX/FAC
      LN1=L1/FAC
      CN1=C1/FAC
      CN2=C2/FAC
      LN=L/FAC
      WRITE(5,133)
133   FORMAT(/' BOTT-DUFFIN-CASE(A)-MODIFIED(A)'/)
      WRITE(5,132)
      WRITE(5,101)CX,CN,L1,LN1,C1,CN1,C2,CN2,L,LN,R1,R1,R2,R2
101   FORMAT(
     1 ' C0 ='2E13.5/' L1 ='2E13.5/' C1 ='2E13.5/' C2 ='2E13.5/
     2 ' L0 ='2E13.5/' R1 ='2E13.5/' R2 ='2E13.5/)
      Q=A*SQRT(C*E)+B*SQRT(B*D)
      CX=SQRT(A*B/E/F)
      CN=CX/FAC
      R1=D/A
      C1=Q/C/D*SQRT(A*C/B/F)
      CN1=C1/FAC
      L2=M**2/Q/C/SQRT(E*C)
```

```
      LN2=L2/FAC
      L=D/Q*SQRT(B*D)
      LN=L/FAC
      R2=F/C
      WRITE(5,134)
134   FORMAT(/' BOTT-DUFFIN-CASE(A)-MODIFIED(B)'/)
      WRITE(5,132)
      WRITE(5,102)CX,CN,C1,CN1,L2,LN2,C2,CN2,L,LN,R1,R1,R2,R2
102   FORMAT(
     1 ' CO ='2E13.5/' C1 ='2E13.5/' L2 ='2E13.5/' C2 ='2E13.5/
     2 ' LO ='2E13.5/' R1 ='2E13.5/' R2 ='2E13.5/)
      CX=SQRT(A*B/E/F)
      CN=CX/FAC
      R1=D/A
      C1=Q**2*SQRT(A/C)/(M*B*D)
      CN1=C1/FAC
      L1=M*B*D/(C*Q*SQRT(A*E))
      LN1=L1/FAC
      L=D/Q*SQRT(B*D)
      LN=L/FAC
      L2=M*SQRT(A/C)/(A*C)
      LN2=L2/FAC
      C2=A*C*SQRT(D/F)/M
      CN2=C2/FAC
      R2=F/C
      WRITE(5,152)
152   FORMAT(/' DARLINGTON-CASE(A)'/)
      WRITE(5,132)
      WRITE(5,100)CX,CN,L1,LN1,C1,CN1,R1,R1,R2,R2,
     1 L2,LN2,C2,CN2,L,LN
      RETURN
      END
C
      SUBROUTINE BRUNE(A,B,C,D,E,F)
      REAL LA,LB,M,LNA,LNB,MN
      COMMON FAC
      LA=D/B
      LNA=LA/FAC
      LB=A*F/B/C
      LNB=LB/FAC
      M=A/B*SQRT(D*F/A/C)
      MN=M/FAC
      CX=B/F
      CN=CX/FAC
      R=F/C
      WRITE(5,135)
135   FORMAT(/'          BRUNE NETWORK'/)
      WRITE(5,132)
132   FORMAT(7X'NORMALIZED'6X'FINAL')
      WRITE(5,105)LA,LNA,LB,LNB,M,MN,CX,CN,R,R
105   FORMAT(
     1 ' LA ='2E13.5/' LB ='2E13.5/'  M ='2E13.5/
     2 ' CO ='2E13.5/'  R ='2E13.5/)
      RETURN
```

```
      END
C
      SUBROUTINE TRY1(A,B,C,D,E,F)
      REAL L1,LN1
      COMMON FAC
      IF(ABS(C).GT.1.E-8)STOP' TRY 1: C.NE.0 ?'
      Q=B*E-A*F
      IF(Q.LT.0.)STOP' TRY 1: BE-AF .LT. ZERO ?'
      IF(Q/B**2.GT.D/A)GOTO 7
      C1=B/F
      CN1=C1/FAC
      R1=Q/B**2
      L1=D/B-A*R1/B
      LN1=L1/FAC
      R2=B*L1/A
      WRITE(5,107)
107   FORMAT(/' LADDER NETWORK 1-A (ZERO AT ZERO)'/)
      WRITE(5,132)
132   FORMAT(7X'NORMALIZED'6X'FINAL')
      WRITE(5,120)C1,CN1,R1,R1,L1,LN1,R2,R2
120   FORMAT(' C1 ='2E13.5/' R1 ='2E13.5/' L1 ='2E13.5/
     1 ' R2 ='2E13.5/)
      RETURN
7     C1=B/F
      CN1=C1/FAC
      R1=D/A
      C2=A**2*B/(A*Q-B**2*D)
      CN2=C2/FAC
      R2=Q/B**2-D/A
      WRITE(5,137)
137   FORMAT(/'  LADDER NETWORK 1-B (ZERO AT ZERO)'/)
      WRITE(5,132)
      WRITE(5,121)C1,CN1,R1,R1,C2,CN2,R2,R2
121   FORMAT(' C1 ='2E13.5/' R1 ='2E13.5/' C2 ='2E13.5/
     1 ' R2 ='2E13.5/)
      RETURN
      END
C
      SUBROUTINE INPUT(N,SIGMA,OMEGA,ALFA,BETA,FAC,SCALE)
      REAL ALFA(10),BETA(10),SIGMA(10),OMEGA(10)
      WRITE(5,200)
200   FORMAT(//'   GIVE N - THE NUMBER OF CONJUGATE
     1 POLE PAIRS'/)
      READ(5,*)N
      WRITE(5,201)
201   FORMAT('   GIVE THE POLES AND THE RESIDUES'/
     1'   -REAL + j IMAG   +REAL + j IMAG'/)
      DO 37 I=1,N
37    READ(5,*)SIGMA(I),OMEGA(I),ALFA(I),BETA(I)
      WRITE(5,203)
203   FORMAT(/'   GIVE THE NORMALIZATION'/)
      READ(5,*)FAC .
      RETURN
      END
```

```
C
      SUBROUTINE TRY2(A,B,C,D,E,F)
      REAL L1,LN1,L2,LN2
      COMMON FAC
      IF(ABS(A).GT.1.E-8)STOP' TRY 2: A.NE.ZERO ?'
      Q=B*E-C*D
      IF(Q.LT.0.)STOP' TRY 2: BE-CD .LT. ZERO ?'
      IF(Q/B**2.GT.F/C)GOTO 17
      L1=D/B
      LN1=L1/FAC
      R1=Q/B**2
      C1=B**3/(B**2*F-Q*C)
      CN1=C1/FAC
      R2=F/C-Q/B**2
      WRITE(5,108)
108   FORMAT(/' LADDER NETWORK 2-A (ZERO AT INFINITY)'/)
      WRITE(5,132)
132   FORMAT(7X'NORMALIZED'6X'FINAL')
      WRITE(5,120)C1,CN1,R1,R1,L1,LN1,R2,R2
120   FORMAT(' C1 ='2E13.5/' R1 ='2E13.5/' L1 ='2E13.5/
     1 ' R2 ='2E13.5/)
      RETURN
17    L1=D/B
      LN1=L1/FAC
      R1=F/C
      L2=(Q*C-B**2*F)/(B*C**2)
      LN2=L2/FAC
      R2=Q/B**2-F/C
      WRITE(5,138)
138   FORMAT(/'  LADDER NETWORK 2-B (ZERO AT INFINITY)'/)
      WRITE(5,132)
      WRITE(5,123)L1,LN1,R1,R1,L2,LN2,R2,R2
123   FORMAT(' L1 ='2E13.5/' R1 ='2E13.5/' L2 ='2E13.5/
     1 ' R2 ='2E13.5/)
      RETURN
      END
C
      SUBROUTINE BBOTT(A,B,C,D,E,F)
      REAL M,L,LN,L1,LN1,L2,LN2
      COMMON FAC
      M=B*SQRT(D*F)+E*SQRT(A*C)
      CX=A/F*SQRT(C*E/B/D)
      CN=CX/FAC
      L1=M/A/C*SQRT(D/F)
      LN1=L1/FAC
      C1=A/M*SQRT(A*C)
      CN1=C1/FAC
      R1=D/A
      C2=M/F/SQRT(D*F)
      CN2=C2/FAC
      L2=D*F/M*SQRT(A/C)
      LN2=L2/FAC
      R2=F/C
      L=SQRT(D*E/B/C)
```

```
      LN=L/FAC
      WRITE(5,231)
231   FORMAT(/'  BOTT-DUFFIN CASE(B)-UNMODIFIED'/)
      WRITE(5,132)
132   FORMAT(7X'NORMALIZED'6X'FINAL')
      WRITE(5,200)CX,CN,L1,LN1,C1,CN1,R1,R1,
     1 C2,CN2,L2,LN2,R2,R2,L,LN
200   FORMAT(
     1 ' C0 ='2E13.5/' L1 ='2E13.5/' C1 ='2E13.5/' R1 ='2E13.5//
     2 ' C2 ='2E13.5/' L2 ='2E13.5/' R2 ='2E13.5/' L0 ='2E13.5/)
      Q=D*SQRT(B*F)+E*SQRT(A*E)
      CX=A/Q*SQRT(A*E)
      CN=CX/FAC
      R1=D/A
      L1=Q/A/C*SQRT(C*D/E/F)
      LN1=L1/FAC
      R2=F/C
      C2=M**2/Q/F/SQRT(B*F)
      CN2=C2/FAC
      L2=Q*A*F/M**2*SQRT(B*D/A/C)
      LN2=L2/FAC
      L=SQRT(D*E/B/C)
      LN=L/FAC
      WRITE(5,233)
233   FORMAT(/'  BOTT-DUFFIN-CASE(B)-MODIFIED(A)'/)
      WRITE(5,132)
      WRITE(5,201)CX,CN,R1,R1,L1,LN1,R2,R2,
     1 C2,CN2,L2,LN2,L,LN
201   FORMAT(
     1 ' C0 ='2E13.5/' R1 ='2E13.5/' L1 ='2E13.5/' R2 ='2E13.5/
     2 ' C2 ='2E13.5/' L2 ='2E13.5/' L0 ='2E13.5/)
      R=C*SQRT(A*E)+B*SQRT(B*F)
      CX=R/F/SQRT(B*F)
      CN=CX/FAC
      L2=A*F/R*SQRT(B*D/A/C)
      LN2=L2/FAC
      L1=M**2/R/A/C*SQRT(C*D/E/F)
      LN1=L1/FAC
      C1=R*A/M**2*SQRT(A*E)
      CN1=C1/FAC
      R1=D/A
      R2=F/C
      L=SQRT(D*E/B/C)
      LN=L/FAC
      WRITE(5,234)
234   FORMAT(/'  BOTT-DUFFIN-CASE(B)-MODIFIED(B)'/)
      WRITE(5,132)
      WRITE(5,202)CX,CN,L2,LN2,L1,LN1,C1,CN1,
     1 R1,R1,R2,R2,L,LN
202   FORMAT(
     1 ' C0 ='2E13.5/' L2 ='2E13.5/' L1 ='2E13.5/' C1 ='2E13.5/
     2 ' R1 ='2E13.5/' R2 ='2E13.5/' L0 ='2E13.5/)
      CX=R/F/SQRT(B*F)
      CN=CX/FAC
```

```
      L2=M*B*F*SQRT(A/C)/R**2
      LN2=L2/FAC
      L1=M*SQRT(D/F)/A/C
      LN1=L1/FAC
      C2=R*A*SQRT(C*E)/M/B/F
      CN2=C1/FAC
      R1=D/A
      R2=F/C
      L=SQRT(D*E/B/C)
      LN=L/FAC
      C1=A*SQRT(A*C)/M
      CN1=C1/FAC
      WRITE(5,252)
252   FORMAT(/' DARLINGTON-CASE(BO'/)
      WRITE(5,132)
      WRITE(5,200)CX,CN,L1,LN1,C1,CN1,R1,R1,
     1 C2,CN2,L2,LN2,R2,R2,L,LN
      RETURN
      END
```

```
 ex granit.for
LINK:   Loading
[LNKXCT GRANIT Execution]

  GIVE N - THE NUMBER OF CONJUGATE POLE PAIRS

2

  GIVE THE POLES AND THE RESIDUES
  -REAL + j IMAG   +REAL + j IMAG

.08427 .9158 .1112e-2 .3121e-3
.1473 2.870 .1319e-2 .3301e-3

  GIVE THE NORMALIZATION

9.4248e6


        ****** POLE PAIR NO.  1 ******


  THE COEFFICIENTS BEFORE PADDING

A = 0.0000E+00 B = 0.2224E-02 C =-0.3842E-03
D = 0.1000E+01 E = 0.1685E+00 F = 0.8458E+00


  THE MINIMUM REAL PART OCCURS AT THE (NORMALIZED)
          FREQUENCY = 0.000000E+00
  THE NECESSARY PADDING IS = 0.220129E+04   OHMS


NEW COEFFICIENTS (AFTER PADDING)

A = 0.4543E-03 B = 0.2301E-02 C = 0.0000E+00
D = 0.1000E+01 E = 0.1685E+00 F = 0.8458E+00


LADDER NETWORK 1-A (ZERO AT ZERO)

      NORMALIZED      FINAL
C1 =  0.27200E-02  0.28860E-09
R1 =  0.66342E+00  0.66342E+00
L1 =  0.43454E+03  0.46107E-04
R2 =  0.22006E+04  0.22006E+04
```

****** POLE PAIR NO. 2 ******

THE COEFFICIENTS BEFORE PADDING

A = 0.0000E+00 B = 0.2638E-02 C =-0.1506E-02
D = 0.1000E+01 E = 0.2946E+00 F = 0.8259E+01

THE MINIMUM REAL PART OCCURS AT THE (NORMALIZED)
FREQUENCY = 0.159812E+01
THE NECESSARY PADDING IS = 0.495870E+04 OHMS

NEW COEFFICIENTS (AFTER PADDING)

A = 0.2017E-03 B = 0.2697E-02 C = 0.1593E-03
D = 0.1000E+01 E = 0.2946E+00 F = 0.8259E+01

BRUNE NETWORK

	NORMALIZED	FINAL
LA =	0.37073E+03	0.39335E-04
LB =	0.38764E+04	0.41130E-03
M =	0.11988E+04	0.12720E-03
C0 =	0.32662E-03	0.34655E-10
R =	0.51850E+05	0.51850E+05

BOTT-DUFFIN-CASE(A)-UNMODIFIED

	NORMALIZED	FINAL
C0 =	0.47285E-03	0.50170E-10
L1 =	0.36822E+03	0.39069E-04
C1 =	0.10634E-02	0.11283E-09
R1 =	0.49587E+04	0.49587E+04
R2 =	0.51850E+05	0.51850E+05
L2 =	0.27340E+06	0.29008E-01
C2 =	0.14322E-05	0.15196E-12
L0 =	0.12157E+06	0.12899E-01

BOTT-DUFFIN-CASE(A)-MODIFIED(A)

	NORMALIZED	FINAL
C0 =	0.47285E-03	0.50170E-10
L1 =	0.36745E+03	0.38987E-04
C1 =	0.10656E-02	0.11306E-09
C2 =	0.99133E-06	0.10518E-12
L0 =	0.39497E+06	0.41908E-01
R1 =	0.49587E+04	0.49587E+04
R2 =	0.51850E+05	0.51850E+05

BOTT-DUFFIN-CASE(A)-MODIFIED(B)

	NORMALIZED	FINAL
C0 =	0.47285E-03	0.50170E-10
C1 =	0.10666E-02	0.11317E-09
L2 =	0.39460E+06	0.41869E-01
C2 =	0.99133E-06	0.10518E-12
L0 =	0.36711E+03	0.38951E-04
R1 =	0.49587E+04	0.49587E+04
R2 =	0.51850E+05	0.51850E+05

DARLINGTON-CASE(A)

	NORMALIZED	FINAL
C0 =	0.47285E-03	0.50170E-10
L1 =	0.12121E+06	0.12860E-01
C1 =	0.10698E-02	0.11351E-09
R1 =	0.49587E+04	0.49587E+04
R2 =	0.51850E+05	0.51850E+05
L2 =	0.27340E+06	0.29008E-01
C2 =	0.14322E-05	0.15196E-12
L0 =	0.36711E+03	0.38951E-04

ENTER 1 FOR NEXT PROBLEM OR ZERO TO STOP

0

STOP

END OF EXECUTION
CPU TIME: 0.38 ELAPSED TIME: 3:15.70
EXIT

REFERENCES

1. N. Balabanian, Network Synthesis, Englewood Cliffs, N.J.: Prentice-Hall, Inc., 1958.

2. N. Balabanian and C. R. Cahn, "A Note on Tee-Pi Transformations", Proc. IRE, Vol. 43, p. 1530, October 1955.

3. A Bar-Lev, "On the Realization of Nonminimum Biquadratic Driving Point Functions", Proc. IRE, Vol. 50, pp. 293-295, September 1962.

4. C. E. Baum, "On the Singularity Expansion Method for the Solution of Electromagnetic Interaction Problems", AFWL Interaction Note 88, December 1971.

5. C. E. Baum, "Single Port Equivalent Circuits for Antennas and Scatterers", AFWL Interaction Note 295, March 1976.

6. C. E. Baum and B. K. Singaraju, "The Singularity and Eigenmode Expansion Methods with Application to Equivalent Circuits and Related Topics", to be published.

7. R. F. Blackburn, "Analysis and Synthesis of an Impedance-Loaded Loop Antenna Using the Singularity Expansion Method", AFWL Report, November 1976.

8. R. Bott and R. J. Duffin, "Impedance Synthesis Without Use of Transformers", J. Appl. Phys., Vol. 20, p. 816, August 1949.

9. J. Bowers and S. Sedore, SCEPTRE: A Computer Program for Circuit and System Analysis, Englewood Cliffs, N.J.: Prentice Hall, Inc., 1971.

10. O. Brune, "Synthesis of a Finite 2-Terminal Network Whose Driving Point Impedance is a Prescribed Function of Frequency", J. Math. and Physics., Vol. 10, pp. 191-236, August 1931.

11. W. H. Chen, Linear Network Design and Synthesis, New York: McGraw-Hill Book Co., Inc., 1964.

12. S. Darlington, "Synthesis of Reactance 4-Poles", J. Math. and Physics., Vol. 18, pp. 257-353, September 1939.

13. R. M. Foster, "Passive Network Synthesis", Proc. Symp. on Modern Network Synthesis, Polytechnic Institute of Brooklyn, New York, 1955.

14. R. M. Foster, "Biquadratic Impedances Realizable by a Generalization of the Five-Element Minimum-Resistance Bridges", IEEE Trans., Vol. CT-10, pp. 363-367, September 1963.

15. E. A. Guillemin, Synthesis of Passive Networks, Hungtington, N.Y.: R. E. Krieger Publishing Co., Inc., 1977.

REFERENCES (Continued)

16. D. Hazony, Elements of Network Synthesis, New York: Reinhold Publishing Corp., 1963.

17. K. B. Irani and C. P. Womack, "A Realization Theorem for Biquadratic Minimum Driving-Point Functions", Proc. IRE, Vol. 48, pp. 1659-1660, September 1960.

18. S. Karni, Network Theory: Analysis and Synthesis, Boston: Allyn and Bacon, Inc., 1966.

19. W. H. Kim, "On Non-Series-Parallel Realization of Driving Point Functions", 1958 IRE National Convention Record, pt. 2, pp. 76-82.

20. E. S. Kuh, "Special Synthesis Techniques for Driving Point Impedance Functions", Trans. IRE, Vol. CT-2, pp. 302-308, December 1955.

21. F. F. Kuo, Network Analysis and Synthesis, New York: John Wiley & Sons, Inc., 1966.

22. G. H. Leichner, "Network Synthesis Using a Digital Computer", Proc. National Electronics Conf., Vol. 12, pp. 830-838, 1956.

23. G. L. Matthaei, "Some Techniques for Network Synthesis", Proc. IRE, Vol. 42, pp. 1126-1137, July 1954.

24. K. A. Michalski and L. W. Pearson, "Practical Issues of Synthesizing Pole-Pair Admittances for SEM Equivalent Circuits", 1979 National Radio Science Meeting, Boulder, CO, November 1979.

25. E. K. Miller, A. J. Poggio, and G. J. Burke, "An Integro-Differential Equation Technique for the Time Domain Analysis of Thin Wire Structures", J. Comput. Phys., Vol. 12, 1973.

26. F. Miyata, "A New System of Two-Terminal Synthesis", Trans. IRE, Vol. CT-2, pp. 297-302, December 1955.

27. R. H. Pantell, "A New Method of Driving Point Impedance Synthesis", Proc. IRE, Vol. 42, p. 861, May 1954.

28. R. H. Pantell, "Synthesis Techniques", Proc. IRE, Vol. 43, pp. 625-626, May 1955.

29. L. W. Pearson and D. R. Wilton, "On the Physical Realizability of Broadband Lumped-Parameter Equivalent Circuits for Energy Collecting Structures", University of Kentucky Electromagnetics Research Report No. 79-2, July 1979.

30. L. W. Pearson, "Applications of the Singularity Expansion Method", Short Course in Numerical and Asymptotic Techniques for Electromagnetics and Antennas, Blue Mountain Lake, NY, September 1979.

REFERENCES (Continued)

31. F. M. Reza, "Synthesis of One Terminal-Pair Passive Networks Without Ideal Transformers", Proc. IRE, Vol. 42, p. 349, January 1954.

32. F. M. Reza, "Synthesis Without Ideal Transformers", J. Appl. Phys., Vol. 25, pp. 807-808, June 1954.

33. F. M. Reza, "A Bridge Equivalent for a Brune Cycle Terminated in a Resistor", Proc. IRE, Vol. 42, p. 1321, August 1954.

34. D. H. Schaubert, "Application of Prony's Method to Time-Domain Reflectometer Data and Equivalent Circuit Synthesis", IEEE Trans., Vol. AP-27, pp. 180-184, March 1979.

35. S. A. Schelkunoff, Advanced Antenna Theory, New York: John Wiley & Sons, Inc., 1952.

36. S. Seshu, "Minimal Realizations of the Biquadratic Minimum Function", IRE Trans., Vol. CT-6, pp. 345-350, December 1959.

37. J. E. Storer, "Relationship Between the Bott-Duffin and Pantell Impedance Synthesis", Proc. IRE, Vol. 42, p. 1451, September 1954.

38. J. E. Storer, Passive Network Synthesis, New York: McGraw-Hill Book Co., Inc., 1957.

39. G. W. Streable and L. W. Pearson, "On the Physical Realizability of Broadband Equivalent Circuits for Wire Loop and Dipole Antennas", University of Kentucky Electromagnetic Research Report No. 79-1, May 1979.

40. G. W. Streable, L. W. Pearson, K. A. Michalski, "On the Low Frequency Asymptotic Behavior of SEM-Derived Equivalent Circuits for Wire Antennas", National Radio Science Meeting, Seattle, Wash., June 1979.

41. A. Talbot, "Generalized Brune Synthesis", in S. R. Deards (ed.), Recent Developments in Network Theory, New York: The Macmillan Co., 1963.

42. F. M. Tesche, "On the Singularity Expansion Method as Applied to Electromagnetic Scattering from Thin Wires", AFWL Interaction Note 102, April 1972.

43. F. M. Tesche, "Application of the Singularity Expansion Method to the Analysis of Impedance Loaded Linear Antennas", AFWL Sensor and Simulation Note 177, May 1973.

44. D. F. Tuttle, Jr., Network Synthesis, Vol. 1, New York: John Wiley & Sons, Inc., 1958.

45. K. R. Umashankar, "The Calculation of Electromagnetic Transient Currents on Thin Perfectly Conducting Bodies Using Singularity Expansion Method", Doctoral Dissertation, University of Mississippi, August 1974.

REFERENCES (Continued)

46. M. E. VanValkenburg, "Special Case of a Bridge Equivalent of Brune Networks", Proc. IRE, Vol. 44, p. 1621, November 1956. (Correction, Vol. 45, p. 20, January 1957.)

47. M. E. VanValkenburg, Introduction to Modern Network Synthesis, New York: John Wiley & Sons, Inc., 1960.

48. L. W. Ware, "A Short-Cut in the Brune Synthesis of a Biquadratic", IEEE Trans., Vol. E-9, pp. 221-222, December 1966.

49. L. Weinberg, Network Analysis and Synthesis, New York: McGraw-Hill Book Co., Inc., 1962.

50. L. V. Auth, "RLC Biquadratic Driving-Point Synthesis Using the Resistive Three-Port", IEEE Trans., Vol. CT-11, pp. 82-88, March 1964.

51. S. G. Chan and L. Phung, "Necessary and Sufficient Conditions for the Realizability of Biquadratic Functions", IEEE Trans., Vol. CAS-21, pp. 197-198, March 1974.

52. S. Y. Chang, "On Biquadratic Functions with Real Noninterlaced Poles and Zeros", IEEE Trans., Vol. CT-16, pp. 250-252, Mary 1969.

53. E. C. Cutler, "A Note on the Miyata Driving-Point Synthesis", IEEE Trans., Vol. CT-10, pp. 120-121, March 1963.

54. C. Eswaran and V. G. K. Murti, "Transformerless Realization of Biquadratic Driving-Point Immittance Functions", IEEE Trans., Vol. CT-20, pp. 314-316, Mary 1973.

55. R. M. Foster, "Academic and Theoretical Aspects of Circuit Theory", IEEE Trans., Vol. CT-9, pp. 866-871, May 1962.

56. R. M. Foster and E. L. Ladenheim, "A Class of Biquadratic Impedances", IEEE Trans., Vol. CT-10, pp. 262-265, June 1963.

57. R. M. Foster, "Minimum Biquadratic Impedances", IEEE Trans., Vol. CT-10, p. 527, December 1963.

58. P. M. Lin, "On Biquadratic Impedances with Two Reactive Elements", IEEE Trans., Vol. CT-18, p. 277, March 1971.

59. E. L. Ladenheim, "A Special Biquadratic Structure", IEEE Trans., Vol. CT-10, pp. 455-456, September 1963.

60. E. L. Ladenheim, "Three-Reactive Five-Element Biquadratic Structures", IEEE Trans., Vol. CT-11, pp. 88-97, March 1964.

61. S. Tirtoprodjo, "Comments 'On Biquadratic Functions With Real Noninterlaced Poles and Zeros'", IEEE Trans., Vol. CT-17, p. 417, August 1970.

REFERENCES (Continued)

62. S. Tirtoprodjo, "Series-Parallel Six-Element Synthesis of the Biquadratic Impedances", IEEE Trans., Vol. CT-18, pp. 293-294, March 1971.

63. C. G. Vasiliu, "Three-Reactive Five-Element Structures", IEEE Trans., Vol. CT-16, p. 99, February 1969.

64. C. G. Vasiliu, "Series-Parallel Six-Element Synthesis of the Biquadratic Impedances", IEEE Trans., Vol. CT-17, pp. 115-121, February 1970. (Correction, Vol. CT-18, p. 207, January 1971.)

65. C. G. Vasiliu, "Four-Reactive Six-Element Biquadratic Structures", IEEE Trans., Vol. CT-19, pp. 530-531, September 1972.

66. J. H. Westcott, "Driving-Point Impedance Synthesis Using Maximally Lossy Elements", Proc. Symp. on Modern Network Synthesis, Polytechnic Institute of Brooklyn, New York, 1955.

FILM